Self Diagnosis Supported model

# SERVICE MANUAL

# BA-5 CHASSIS

| MODEL NAME | REMOTE COMMANDER | DESTINATION | CHASSIS NO. |
|---|---|---|---|
| **KV-27FV16** | RM-Y171 | US | SCC-S40K-A |
| **KV-27FV16** | RM-Y171 | CND | SCC-S41J-A |
| **KV-29FV16** | RM-Y171 | E | SCC-S38Q-A |
| **KV-29FV16C** | RM-Y171 | E | SCC-S38R-A |
| **KV-32FS12** | RM-Y168 | US | SCC-S40F-A |
| **KV-32FS12** | RM-Y168 | CND | SCC-S41F-A |
| **KV-32FS16** | RM-Y169 | US | SCC-S40G-A |
| **KV-32FS16** | RM-Y169 | CND | SCC-S41G-A |

KV-27FV16

RM-Y171

## TRINITRON® COLOR TELEVISION

SONY®

9-965-885-03

# SPECIFICATIONS

| | | KV-27FV16 | KV-29FV16<br>KV-29FV16C | KV-32FS12 | KV-32FS16 |
|---|---|---|---|---|---|
| **Power requirements** | | 120V, 60 Hz | 120-220V, 50/60Hz | 120V, 60 Hz | 120V, 60 Hz |
| **Number of inputs/outputs** | | | | | |
| | Video 1) | 3 | 3 | 3 | 3 |
| | S Video 2) | 2 | 2 | 1 | 1 |
| | Audio 3) | 3 | 3 | 3 | 3 |
| | Audio Out 4) | 1 | 1 | 1 | 1 |
| | $Y,P_B, P_R$ 5) | 1 | 1 | 1 | 1 |
| | Monitor Out | 1 | 1 | -- | -- |
| **Speaker output(W)** | | 15Wx2 | 15Wx2 | 5Wx2 | 5Wx2 |
| **Power Consumption(W)** | | | | | |
| | In use(Max) | 220W | 220W | 165W | 170W |
| | In standby | 1W | 1W | 1W | 1W |
| **Dimensions(W/H/D)** | | | | | |
| | (mm) | 762 x 604 x 519 mm | 762 x 604 x 519 mm | 800 x 704 x 582 mm | 800 x 704 x 582 mm |
| | (in) | 30 x 23 7/8 x 20 1/2 in. | 30 x 23 7/8 x 20 1/2 in. | 31 1/2 x 27 3/4 x 23 in. | 31 1/2 x 27 3/4 x 23 in. |
| **Mass** | | | | | |
| | (kg) | 49 kg. | 49 kg. | 74 kg. | 74 kg. |
| | (lbs) | 107 lbs. 13 oz. | 107 lbs. 13 oz. | 162 lbs. 13 oz. | 162 lbs. 13 oz. |

1) 1 Vp-p 75 ohms unbalanced, sync negative
2) Y: 1 Vp-p 75 ohms unbalanced, sync negative
   C: 0.286 Vp-p (Burst signal), 75 ohms
3) 500mVrms (100% modulation), impedance: 47kilohms
4) More than 408 mVrms at the maximum volume setting (variable)
   More than 408 mVrms (fix)
5) Y: 1.0 Vp-p, 75 ohms, sync negative; PB: 0.7 Vp-p, 75 ohms;
   PR: Vp-p, 75 ohms

## Television system

American TV standard/NTSC

## Channel coverage

VHF:2-13/UHF:14-69/CATV:1-125

## Visible screen size

27” picture measured diagonally (KV-27FV16/29FV16/29FV16C ONLY)
32” picture measured diagonally (KV-32FS12/32FS16 ONLY)

## Actual screen size

29” picture measured diagonally (KV-27FV16/29FV16/29FV16C ONLY)
34” picture measured diagonally (KV-32FS12/32FS16 ONLY)

## Antenna

75 ohm external antenna terminal for VHF/UHF

## Supplied accessories

Remote Commander RM-Y168 (KV-32FS12 ONLY )
Remote Commander RM-Y169 (KV-32FS16 ONLY )
Remote Commander RM-Y171 (KV-27FV16/29FV16/29FV16C ONLY )
Size AA (R6) batteries (2)

## Optional accessories

Connecting cables: VMC-810S/820S, VMC-720M,
YC-15V/30V, RK74A
U/V mixer EAC-66
TV Stand: SU27FD3 (KV-27FV16/32FS12/32FS16 ONLY)

***Design and specifications are subject to change without notice.***

**( ● ) SRS (SOUND RETREIVAL SYSTEM)**

The **( ● )** SRS (SOUND RETREIVAL SYSTEM) is manufactured by Sony Corporation under license from SRS Labs, Inc. It is covered by U.S. Patent No. 4,748,669. Other U.S. and foreign patents pending.

The word “SRS” and the SRS symbol **( ● )** are registered trademarks of SRS Labs, Inc.

BBE and BBE symbol are trademarks of BBE Sound, Inc. and are licensed by BBE Sound, Inc. under U.S. Patent No. 4,638,258 and 4,482,866.

# TABLE OF CONTENTS


| Section | Title | Page |
|---|---|---|
| | Warnings and Cautions | 4 |
| | Self-Diagnostic Function | 4 |
| | Safety Check-Out Instructions | 7 |
| **1.** | **GENERAL** | 8 |
| **2.** | **DISASSEMBLY** | |
| 2-1. | Rear Cover Removal | 14 |
| 2-2. | Chassis Assembly Removal | 14 |
| 2-3. | Service Position | 14 |
| 2-4. | Picture Tube Removal | 15 |
| **3.** | **SET-UP ADJUSTMENTS** | |
| 3-1. | Beam Landing | 16 |
| 3-2. | Convergence | 17 |
| 3-3. | Focus | 18 |
| 3-4. | Screen (G2) | 19 |
| 3-5. | Method of Setting the Service Adjustment Mode | 19 |
| 3-6. | White Balance Adjustments | 19 |
| **4.** | **SAFETY RELATED ADJUSTMENTS** | |
| 4-1. | ⧓ R564 Confirmation Method (HV Hold-Down Confirmation and Readjustments) | 20 |
| 4-2. | B+ Voltage Confirmation and Adjustment | 20 |
| **5.** | **CIRCUIT ADJUSTMENTS** | |
| 5-1. | Setting the Service Adjustment Mode | 22 |
| 5-2. | Memory Write Confirmation Method | 22 |
| 5-3. | Adjustment Buttons and Indicators | 22 |
| 5-4. | MA Board Adjustments | 26 |
| **6.** | **DIAGRAMS** | |
| 6-1. | Block Diagram | 31 |
| 6-2. | Circuit Board Location | 35 |
| 6-3. | Printed Wiring Boards and Schematic Diagrams | 35 |
| | • A Board | 36 |
| | • MA Board | 43 |
| | • CA Board | 49 |
| | • HX Board | 50 |
| | • D Board | 51 |
| | • BC Board | 53 |
| | • HA Board | 55 |
| | • HB Board | 56 |
| | • K Board | 57 |
| | • VA Board | 58 |
| | • P Board | 59 |
| 6-4. | Semiconductors | 61 |
| **7.** | **EXPLODED VIEW** | |
| 7-1. | Chassis (KV-27V16/29FV16/29FV16C ONLY) | 62 |
| 7-2. | Picture Tube (KV-27V16/29FV16/29FV16C ONLY) | 63 |
| 7-3. | Chassis (KV-32FS12/32FS16 ONLY) | 64 |
| 7-4. | Picture Tube (KV-32FS12/32FS16 ONLY) | 65 |
| **8.** | **ELECTRICAL PARTS LIST** | 66 |

# WARNINGS AND CAUTIONS

### CAUTION

SHORT CIRCUIT THE ANODE OF THE PICTURE TUBE AND THE ANODE CAP TO THE METAL CHASSIS, CRT SHIELD, OR CARBON PAINTED ON THE CRT, AFTER REMOVING THE ANODE.

### WARNING!!

AN ISOLATION TRANSFORMER SHOULD BE USED DURING ANY SERVICE TO AVOID POSSIBLE SHOCK HAZARD, BECAUSE OF LIVE CHASSIS. THE CHASSIS OF THIS RECEIVER IS DIRECTLY CONNECTED TO THE AC POWER LINE.

### SAFETY-RELATED COMPONENT WARNING!!

COMPONENTS IDENTIFIED BY SHADING AND MARK ⚠ ON THE SCHEMATIC DIAGRAMS, EXPLODED VIEWS, AND IN THE PARTS LIST ARE CRITICAL FOR SAFE OPERATION. REPLACE THESE COMPONENTS WITH SONY PARTS WHOSE PART NUMBERS APPEAR AS SHOWN IN THIS MANUAL OR IN SUPPLEMENTS PUBLISHED BY SONY. CIRCUIT ADJUSTMENTS THAT ARE CRITICAL FOR SAFE OPERATION ARE IDENTIFIED IN THIS MANUAL. FOLLOW THESE PROCEDURES WHENEVER CRITICAL COMPONENTS ARE REPLACED OR IMPROPER OPERATION IS SUSPECTED.

### ATTENTION!!

APRES AVOIR DECONNECTE LE CAP DE L'ANODE, COURT-CIRCUITER L'ANODE DU TUBE CATHODIQUE ET CELUI DE L'ANODE DU CAP AU CHASSIS METALLIQUE DE L'APPAREIL, OU AU COUCHE DE CARBONE PEINTE SUR LE TUBE CATHODIQUE OU AU BLINDAGE DU TUBE CATHODIQUE.

### ATTENTION!!

AFIN D'EVITER TOUT RESQUE D'ELECTROCUTION PROVENANT D'UN CHÁSSIS SOUS TENSION, UN TRANSFORMATEUR D'ISOLEMENT DOIT ETRE UTILISÉ LORS DE TOUT DÉPANNAGE. LE CHÁSSIS DE CE RÉCEPTEUR EST DIRECTEMENT RACCORDÉ À L'ALIMENTATION SECTEUR.

### ATTENTION AUX COMPOSANTS RELATIFS A LA SECURITE!!

LES COMPOSANTS IDENTIFIES PAR UNE TRAME ET PAR UNE MARQUE ⚠ SUR LES SCHEMAS DE PRINCIPE, LES VUES EXPLOSEES ET LES LISTES DE PIECES SONT D'UNEIMPORTANCE CRITIQUE POUR LA SECURITE DU FONCTIONNEMENT. NE LES REMPLACER QUE PAR DES COMPOSANTS SONY DONT LE NUMERO DE PIECE EST INDIQUE DANS LE PRESENT MANUEL OU DANS DES SUPPLEMENTS PUBLIES PAR SONY. LES REGLAGES DE CIRCUIT DONT L'IMPORTANCE EST CRITIQUE POUR LA SECURITE DU FONCTIONNEMENT SONT IDENTIFIES DANS LE PRESENT MANUEL. SUIVRE CES PROCEDURES LORS DE CHAQUE REMPLACEMENT DE COMPOSANTS CRITIQUES, OU LORSQU'UN MAUVAIS FONTIONNEMENT SUSPECTE.

# SELF-DIAGNOSTIC FUNCTION

The units in this manual contain a self-diagnostic function. If an error occurs, the STANDBY/TIMER LED will automatically begin to flash. The number of times the LED flashes translates to a probable source of the problem. A definition of the STANDBY/TIMER LED flash indicators is listed in the instruction manual for the user's knowledge and reference. If an error symptom cannot be reproduced, the Remote Commander can be used to review the failure occurrence data stored in memory to reveal past problems and how often these problems occur.

## Diagnostic Test Indicators

When an error occurs, the STANDBY/TIMER LED will flash a set number of times to indicate the possible cause of the problem. If there is more than one error, the LED will identify the first of the problem areas.

Results for all of the following diagnostic items are displayed on screen. No error has occurred if the screen displays a "0".

| Diagnostic Item Description | No. of Times STANDBY/TIMER LED Flashes | Self-Diagnostic Display/ Diagnostic Result | Probable Cause Location | Detected Symptoms |
|---|---|---|---|---|
| Power does not turn on | Does not light | ——— | • Power cord is not plugged in.<br>• Fuse is burned out. (F601) (A Board) | • Power does not come on.<br>• No power is supplied to the TV.<br>• AC power supply is faulty. |
| +B overcurrent (OCP)* | 2 times | 2:0 or 2:1 | • H.OUT (Q502) is shorted. (A Board)<br>• IC702 is shorted. (CA Board) | • Power does not come on.<br>• Load on power line is shorted. |
| I-Prot | 4 times | 4:0 or 4:1 | • +13V is not supplied. (A Board)<br>• IC502 is faulty. (A Board) | • Has entered standby state after horizontal raster.<br>• Vertical deflection pulse is stopped.<br>• Power line is shorted or power supply is stopped. |
| IK | 5 times | 5:0 or 5:1 | • Video OUT (IC502) is faulty. (A Board)<br>• IC301 is faulty. (MA Board)<br>• Screen (G2) is improperly adjusted.** | • No raster is generated.<br>• CRT cathode current detection reference pulse output is small. |

* If a +B overcurrent is detected, stoppage of the vertical deflection is detected simultaneously.
The symptom that is diagnosed first by the microcontroller is displayed on the screen.

** Refer to Screen (G2) Adjustments in Section 3-4 of this manual.

### Display of Standby/Timer LED Flash Count

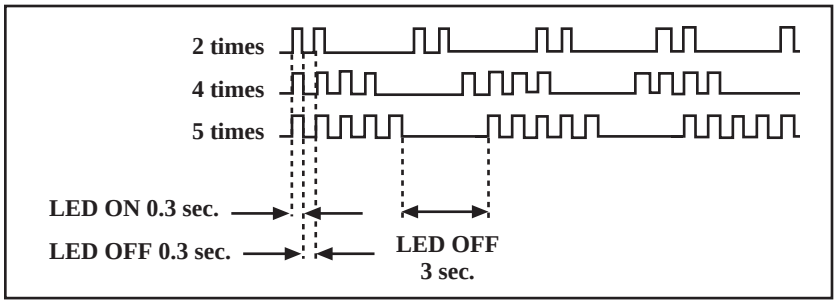


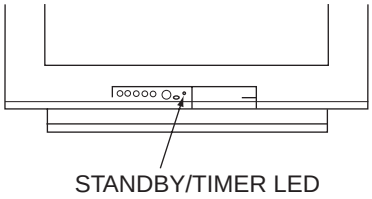


| Diagnostic Item | Flash Count* |
|---|---|
| +B overcurrent | 2 times |
| I-Prot | 4 times |
| IK | 5 times |

*One flash count is not used for self-diagnostic.

### Stopping the Standby/Timer LED Flash

Turn off the power switch on the TV main unit or unplug the power cord from the outlet to stop the STANDBY/TIMER LAMP from flashing.

### Self-Diagnostic Screen Display

For errors with symptoms such as “power sometimes shuts off” or “screen sometimes goes out” that cannot be confirmed, it is possible to bring up past occurrences of failure on the screen for confirmation.

### To Bring Up Screen Test

In standby mode, press buttons on the Remote Commander sequentially, in rapid succession, as shown below:

Display ➡ Channel 5 ➡ Sound volume − ➡ Power ON

⇧

Note that this differs from entering the service mode (sound volume + ).

### Self-Diagnostic Screen Display

| SELF DIAGNOSTIC | | |
|---|---|---|
| 2: | | 0 |
| 3: | N/A | 0 |
| 4: | | 0 |
| 5: | | 1 |
| 101: | N/A | 0 |

Numeral “0” means that no fault was detected.

Numeral “1” means a fault was detected one time only.

## Handling of Self-Diagnostic Screen Display

Since the diagnostic results displayed on the screen are not automatically cleared, always check the self-diagnostic screen during repairs. When you have completed the repairs, clear the result display to “0”.

Unless the result display is cleared to “0”, the self-diagnostic function will not be able to detect subsequent faults after completion of the repairs.

## Clearing the Result Display

To clear the result display to “0”, press buttons on the Remote Commander sequentially when the diagnostic screen is displayed, as shown below:

Channel [8] ➡ [ENTER]

### Quitting the Self-Diagnostic Screen

To quit the entire self-diagnostic screen, turn off the power switch on the Remote Commander or the main unit.

## Self-Diagnostic Circuit

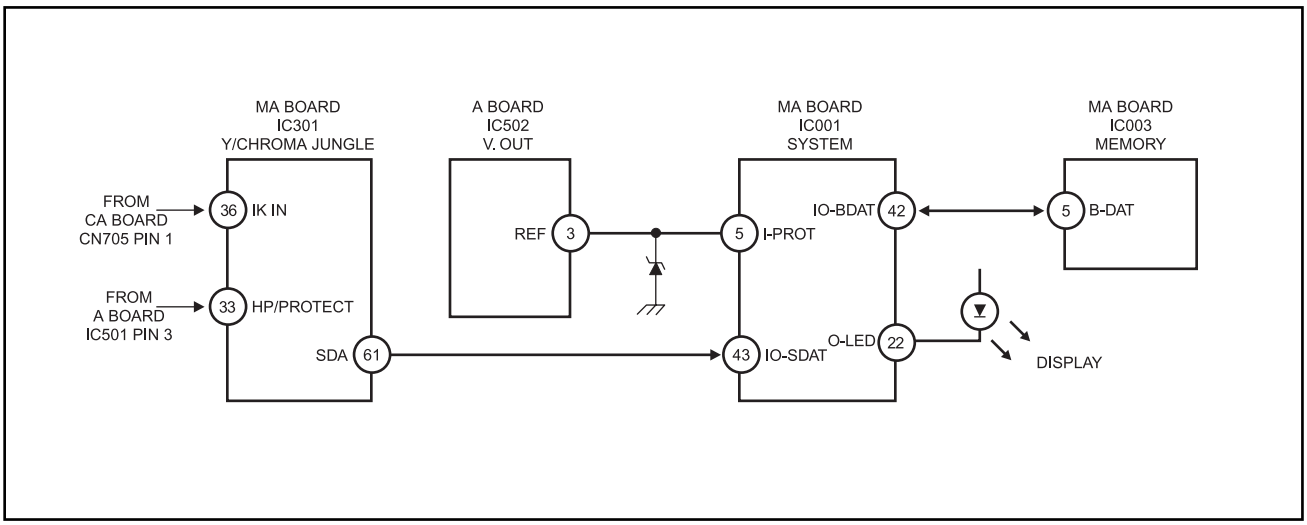


**+B overcurrent (OCP)**

Occurs when an overcurrent on the +B (135V) line is detected by pin 33 of IC301 (MA Board). If the voltage of pin 33 of IC301 (MA Board) is less than 1V when V.SYNC is more than seven verticals in a period, the unit will automatically turn off.

**I-Prot**

Occurs when an absence of the vertical deflection pulse is detected by pin 5 of IC001 (MA Board). Power supply will shut down when waveform interval exceeds 2 seconds.

**IK**

If the RGB levels* do not balance within 2 seconds after the power is turned on, this error will be detected by IC301 (MA Board). TV will stay on, but there will be no picture.

*(Refers to the RGB levels of the AKB detection Ref pulse that detects 1K).

# SAFETY CHECK-OUT

After correcting the original service problem, perform the following safety checks before releasing the set to the customer:

1. Check the area of your repair for unsoldered or poorly soldered connections. Check the entire board surface for solder splashes and bridges.
2. Check the interboard wiring to ensure that no wires are “pinched” or touching high-wattage resistors.
3. Check that all control knobs, shields, covers, ground straps, and mounting hardware have been replaced. Be absolutely certain that you have replaced all the insulators.
4. Look for unauthorized replacement parts, particularly transistors, that were installed during a previous repair. Point them out to the customer and recommend their replacement.
5. Look for parts which, though functioning, show obvious signs of deterioration. Point them out to the customer and recommend their replacement.
6. Check the line cords for cracks and abrasion. Recommend the replacement of any such line cord to the customer.
7. Check the B+ and HV to see if they are specified values. Make sure your instruments are accurate; be suspicious of your HV meter if sets always have low HV.
8. Check the antenna terminals, metal trim, “metallized” knobs, screws, and all other exposed metal parts for AC leakage. Check leakage as described below.

**Leakage Test**

The AC leakage from any exposed metal part to earth ground and from all exposed metal parts to any exposed metal part having a return to chassis, must not exceed 0.5 mA (500 microamperes). Leakage current can be measured by any one of three methods.

1. A commercial leakage tester, such as the Simpson 229 or RCA WT-540A. Follow the manufacturers' instructions to use these instructions.
2. A battery-operated AC milliammeter. The Data Precision 245 digital multimeter is suitable for this job.
3. Measuring the voltage drop across a resistor by means of a VOM or battery-operated AC voltmeter. The “limit” indication is 0.75 V, so analog meters must have an accurate low voltage scale. The Simpson’s 250 and Sanwa SH-63TRD are examples of passive VOMs that are suitable. Nearly all battery-operated digital multimeters that have a 2 VAC range are suitable (see Figure A).

**How to Find a Good Earth Ground**

A cold-water pipe is a guaranteed earth ground; the cover-plate retaining screw on most AC outlet boxes is also at earth ground. If the retaining screw is to be used as your earth ground, verify that it is at ground by measuring the resistance between it and a cold-water pipe with an ohmmeter. The reading should be zero ohms. If a cold-water pipe is not accessible, connect a 60- to 100-watt trouble- light (not a neon lamp) between the hot side of the receptacle and the retaining screw. Try both slots, if necessary, to locate the hot side on the line; the lamp should light at normal brilliance if the screw is at ground potential (see Figure B).

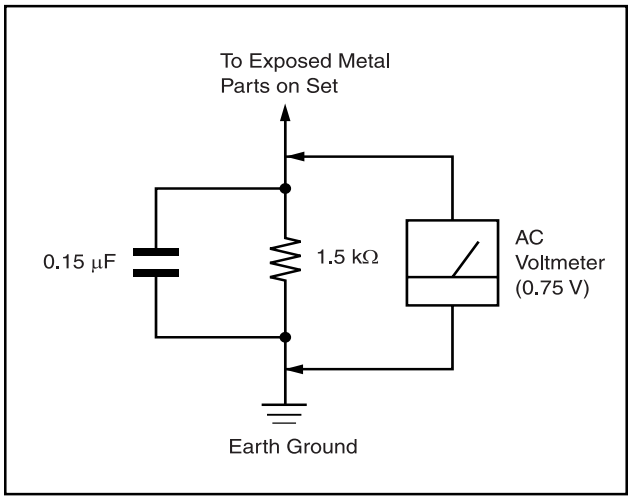


**Figure A. Using an AC voltmeter to check AC leakage.**

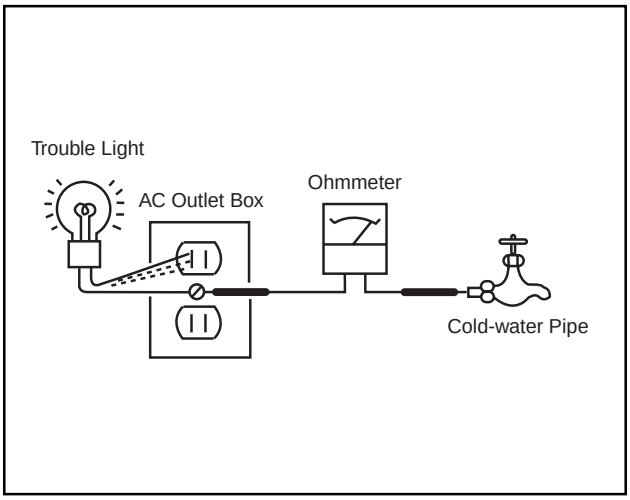


**Figure B. Checking for earth ground.**

The instructions mentioned here are partial abstracts from the Operating Instruction Manual. The page numbers shown reflect those of the Operating Instruction Manual.

# Connecting Your TV

Read this chapter before setting up your TV for the first time. This section covers basic connections in addition to any optional equipment you may be connecting.

## Basic Connections

### TV with indoor or outdoor antenna, or CATV cable

Depending on the cable available in your home, choose one of the connections below:

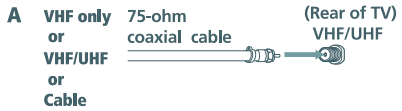


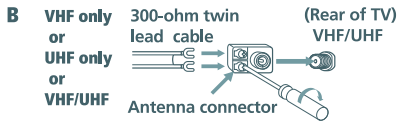


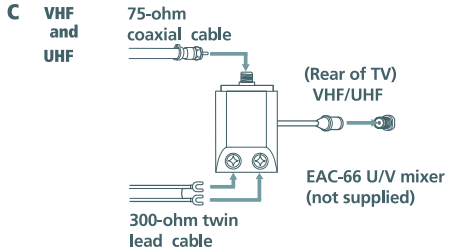


✍ If you are connecting to an indoor or outdoor antenna, you may need to adjust the orientation of the antenna for best reception.





## Cable Box Connections

Some pay cable TV systems to use scrambled or encoded signals that require a cable box to view all channels.

### Cable Box

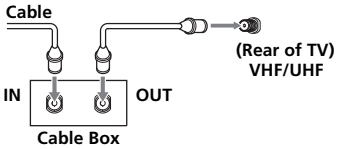


1. Connect the coaxial cable from your cable service to the IN jack on your cable box.
2. Connect a coaxial cable (not supplied) from the OUT jack on your cable box to the VHF/UHF jack on your TV.

✍ If you will be controlling all channel selection through your cable box, you should consider using the Channel Fix feature, (see page 26).

### Cable Box and Cable

For this set up, you can switch between scramble channels (through your cable box), and normal (CATV) channels by using the ANT button.

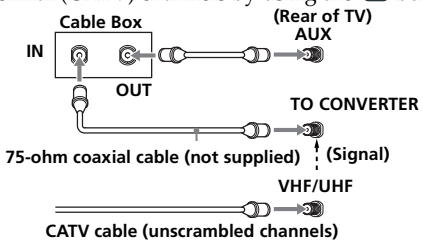


✍ If you are connecting a cable box through the AUX input and would like to switch between the AUX and normal (CATV) input, you should consider using the Channel Fix feature, (see page 26).

✍ Your Sony remote control can be programmed to operate your cable box, (see page 36).

✍ When using PIP, you cannot view the AUX input in the window picture.

# Connecting Additional Equipment

## TV and VCR

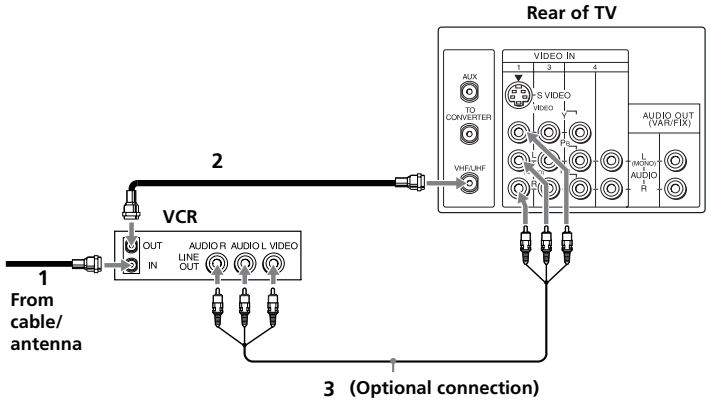


**1** Connect the coaxial cable from your TV antenna or cable service to the IN jack on your VCR.

**2** Connect a coaxial cable (not supplied) from the OUT jack on your VCR to the VHF/UHF jack on the TV.

✍ To watch video programs from your VCR, tune your TV to channel 3 or 4 (as set on the rear of your VCR).

**(Optional connection)**

**3** If your VCR is equipped with video outputs, you can get better picture quality by connecting A/V cables (not supplied) from AUDIO and VIDEO OUT on your VCR to AUDIO/VIDEO IN on your TV.

✍ For optimum picture quality, use S VIDEO instead of the yellow A/V cable. S VIDEO does not provide sound, the audio cables must still be connected.

✍ You can use the TV/VIDEO button to switch between the VHF/UHF and VIDEO inputs.





## TV and Cable Box

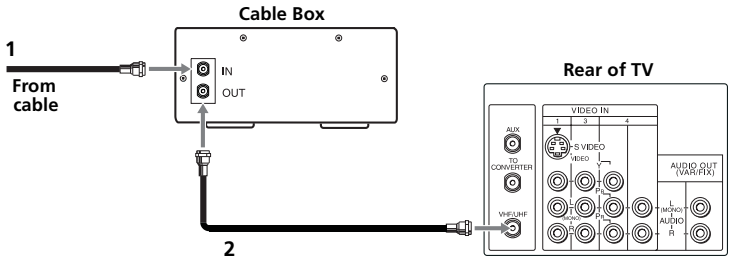


**1** Connect the coaxial cable from your cable service to the IN jack on your cable box.

**2** Connect a coaxial cable (not supplied) from the OUT jack on your cable box to the VHF/UHF jack on the TV.

✍ To view channels from your cable box, tune your TV to channel 3 or 4 (as set on the rear panel of your cable box) and use the cable box's remote control to change channels.

✍ If you will be controlling all channel selection through your cable box, you should consider using the Channel Fix feature, (see page 26).

## TV, Cable box, and Cable

### KV-27FS16, KV-27FV16, KV-32FS16, KV-29FV16 only

For this set up, you can switch between scrambled channels (through your cable box) and normal (CATV) channels by pressing ANT.

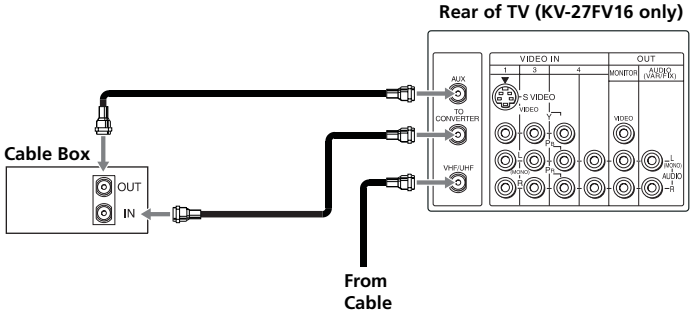


✍ When using PIP, the AUX input cannot be viewed in the window picture.





## TV, VCR, and Cable box

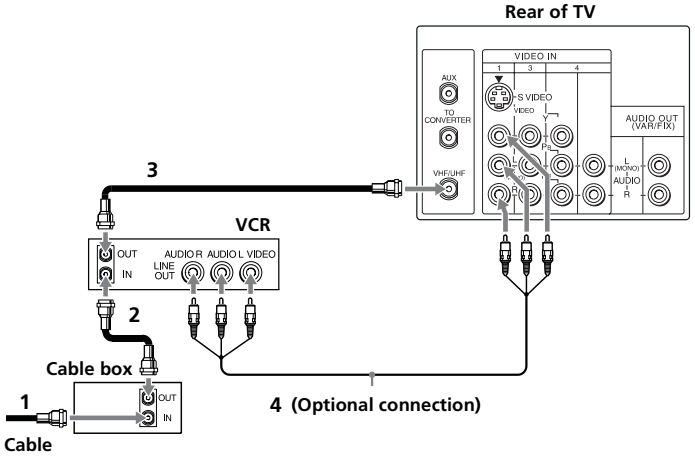


**1** Connect the coaxial cable from your cable service to the IN jack on your cable box.

**2** Connect a coaxial cable (not supplied) from the OUT jack on your cable box to the IN jack on your VCR.

**3** Connect a coaxial cable (not supplied) from the OUT jack on your VCR to the VHF/UHF jack on the TV.

✍ If you will be controlling all channel selection through your cable box, you should consider using the Channel Fix feature, (see page 26).

### (Optional connection)

**4** If your VCR is equipped with video outputs, you can get better picture quality by connecting A/V cables (not supplied) from AUDIO and VIDEO OUT on your VCR to AUDIO/VIDEO IN on your TV.

✍ For optimum picture quality, use S VIDEO instead of the yellow A/V cable. S VIDEO does not provide sound, the audio cables must still be connected.

✍ You can use the TV/VIDEO button to switch between the VHF/UHF and VIDEO inputs.

## TV and Satellite Receiver

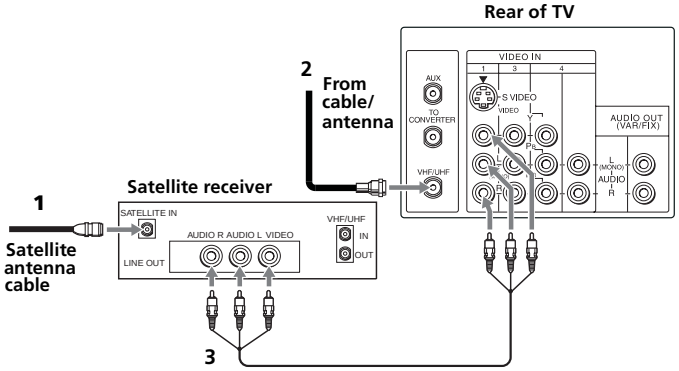


1 Connect the cable from your satellite antenna to SATELLITE IN on your satellite receiver.

2 Connect the coaxial cable from your cable or antenna to the VHF/UHF jack on your TV.

3 Using A/V cables, connect AUDIO and VIDEO OUT on your satellite receiver to AUDIO and VIDEO IN on your TV.

✍ For optimum picture quality, use S VIDEO instead of the yellow A/V cable. S VIDEO does not provide sound, the audio cables must still be connected.

✍ You can use the TV/VIDEO button to switch between the VHF/UHF and satellite receiver inputs.





## TV, Satellite Receiver, and VCR

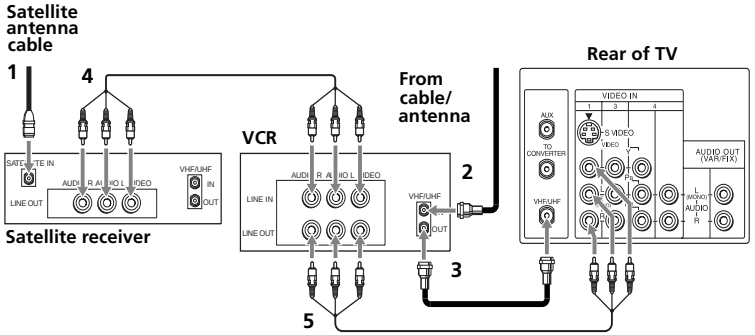


1 Connect the cable from your satellite antenna to SATELLITE IN on your satellite receiver.

2 Connect the coaxial cable from your cable or antenna to the IN jack on your VCR.

3 Using a coaxial cable, connect the OUT jack on your VCR to the VHF/UHF jack on your TV.

4 Using A/V cables, connect AUDIO and VIDEO OUT on your satellite receiver to AUDIO and VIDEO IN on your VCR.

5 Using A/V cables, connect AUDIO and VIDEO OUT on your VCR to AUDIO and VIDEO IN on your TV.

✍ To view from the satellite receiver or VCR, select the video input to which your satellite receiver or VCR is connected by pressing TV/VIDEO on the remote control.

# Using the Remote Control and Basic Functions

This section shows you how to use the more advanced buttons on the remote control and how to use the on-screen menus.

## Using the Remote Control

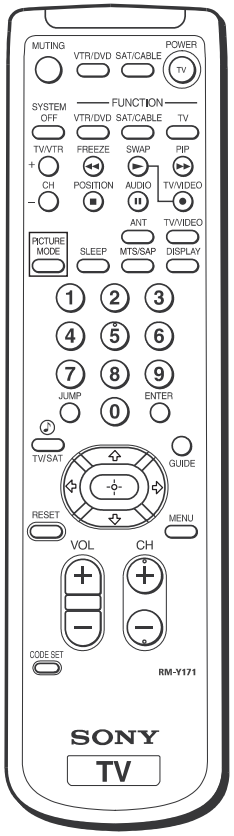


| Button | Description |
|---|---|
| **POWER** | Press when you want to turn connected equipment on and off. |
| **FUNCTION** | Press when you want to control connected equipment with your remote control. |
| **MUTING** | Instantly turns off the sound. Press again or press VOL + to restore sound. |
| **SYSTEM OFF** | Powers off all Sony equipment at once, (may not work with older equipment). |
| **TV/VIDEO** | Cycles through available video inputs. |
| **ANT** | Press to change the VHF/UHF input to the AUX input (KV-27FS16, KV-27FV16, KV-32FS16 only). |
| **TV/VTR** | Press when you are finished using a VCR and you want to switch to the TV input. Your VCR power will remain on. |
| 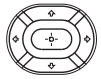 | Moves the cursor in the on-screen menus. Press the arrow buttons to move the cursor. Press the center button to select or access an option. |
| **PICTURE MODE** | Cycles through the available Video Mode settings. |

✍ The remote control shown (RM-Y171) is for KV-27FV16. Your remote control may not look like the one illustrated.





| | |
|---|---|
| **SLEEP** | Turns the TV off automatically in approximately 15, 30, 45, 60, 90, or 120 minutes. Cancel by pressing until SLEEP OFF appears. |
| **MTS/SAP** | Cycles through the Multi-channel TV Sound (MTS) options: Stereo, Mono, and Auto-SAP (Second Audio Programming). |
| **DISPLAY** | Press once to show current time, (if set) and channel number. |
| TV/SAT | Cycles through available Steady Sound settings, (see page 23). |
| **JUMP** | Alternates between the last two channels selected with the 0-9 buttons. |
| **GUIDE** | Brings up the custom guide of your satellite receiver. |
| **MENU** | Displays the on-screen menu. Press again to exit the menu at any time. |
| **RESET** | Press to return to factory settings while in an on-screen menu. |
| **CODE SET** | Use to program your remote control to operate connected video equipment, (see page 36). |

✍ For information on Picture in Picture (PIP) operation buttons, see page 17.

✍ If you lost your remote control, see page 40.

# Troubleshooting

If you are having a problem with your TV, try the suggestions below. If the problem persists, contact your nearest Sony dealer.

| | |
|---|---|
| **No picture, no sound** | ❏ Make sure the power cord is plugged in.<br>❏ If red light is flashing on the front of your TV for more than a few minutes, disconnect and reconnect the power cord to restore the TV. If the problem continues, call your local service center.<br>❏ Check the TV/VIDEO settings: when watching TV, set to TV; when watching video equipment, set to VIDEO (page 14).<br>❏ Make sure the batteries have been inserted correctly into the remote control (page 2).<br>❏ Try another channel, it could be station trouble. |
| **Poor or no picture, good sound** | ❏ Adjust Picture in the Video menu (page 22).<br>❏ Adjust Brightness in the Video menu (page 22).<br>❏ Check the antenna and/or cable connections (page 3). |
| **Good picture, no sound** | ❏ Press MUTING so that MUTING disappears from the screen (page 14).<br>❏ Check your Audio settings. Your TV may be set to Auto-SAP (page 24). |
| **No color** | ❏ Adjust Color in the Video menu (page 22). |
| **No signal** | ❏ Check the Cable setting in the Channel Setup menu (page 25).<br>❏ Check the antenna and/or cable connections (page 3).<br>❏ Make sure the channel selected is currently broadcasting. |
| **Dotted lines or stripes** | ❏ Adjust the antenna.<br>❏ Move the TV away from other electronic equipment. Some electronic equipment can create electrical noise, which can interfere with TV reception. |
| **Double images or ghosts** | ❏ Check your outdoor antenna or call your cable service. |





| | |
|---|---|
| **Cannot receive higher number channels (UHF) when using an antenna** | ❏ Make sure Cable is set to OFF in the Channel Setup menu (page 25).<br>❏ Perform Auto Program to add channels that are not presently in the memory (page 16). |
| **Cable stations don't seem to work** | ❏ Make sure Cable is set to ON in the Channel Setup menu (page 25).<br>❏ Perform Auto Program to add channels that are not presently in the memory (page 16). |
| **Remote control does not operate** | ❏ Batteries could be weak. Replace them (page 2).<br>❏ Move the TV 3-4 feet away from fluorescent lights. |
| **The TV needs to be cleaned** | ❏ Clean the TV with a soft dry cloth. Never use strong solvents such as thinner or benzine, which might damage the finish of the cabinet. |
| **Lost password for Parental Control** | ❏ In the password screen, enter the following master password: 4357. After using the master password, you must create a new password, it cannot be used to unlock currently blocked channels. |
| **You lost your remote control** | ❏ You can use the front A/V panel controls to access the menu. Press MENU to open the menu. Use the ⇧ or ⇩ buttons on the front A/V panel instead of the ⇧ or ⇩ buttons on the remote control. Use the ⊕ button on the front A/V panel instead of the ⇦, ⇨, and ⊕ buttons on the remote control. Press MENU again when the setting or adjustment is complete. Contact your nearest Sony dealer to order a replacement. |
| **Cannot access other menus when using the Basic Menu** | ❏ If you use the MENU button to close the Basic menu, only the Basic menu appears when you press MENU again. To have access to the other menus, use the ⇩ button to select Advance Menu (page 35). |

*If, after reading these Operating Instructions, you have additional questions related to the use of your Sony television, please call our Direct Response Center at 1-800-222-SONY (7669) (U.S. residents only) or (416) 499-SONY (7669) (Canadian residents only).*

# SECTION 2
# DISASSEMBLY

## 2-1. REAR COVER REMOVAL

**KV-27FV16/29FV16/29FV16C ONLY**

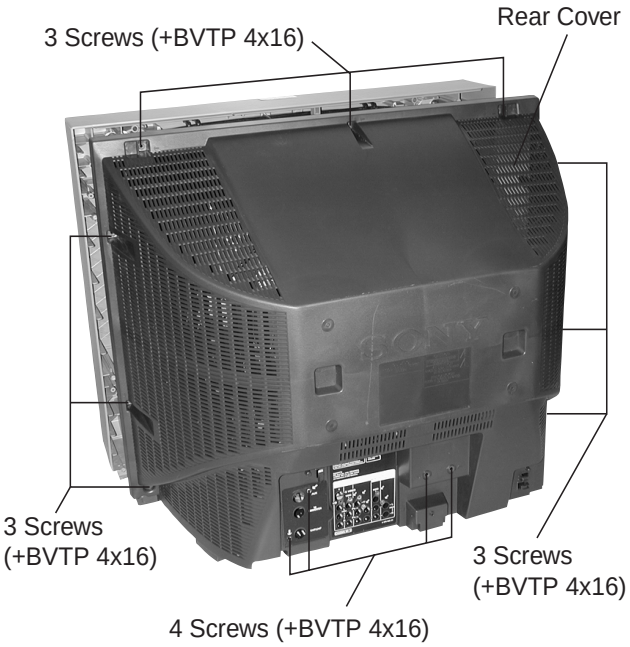


**KV-32FS12/32FS16 ONLY**

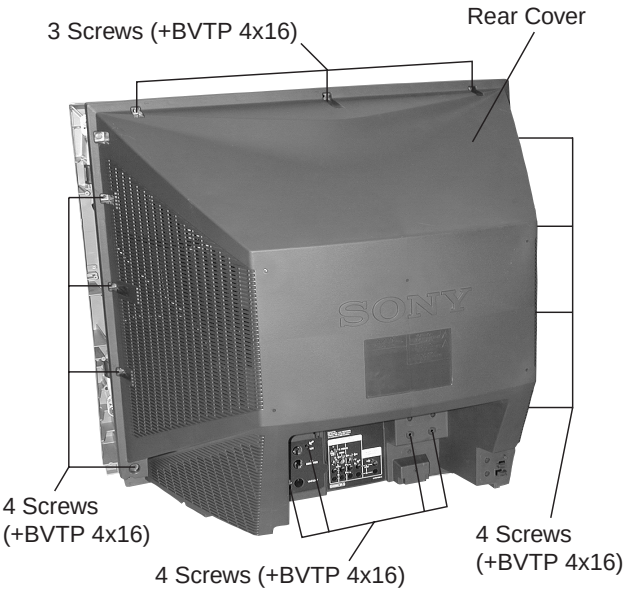


## 2-2. CHASSIS ASSEMBLY REMOVAL

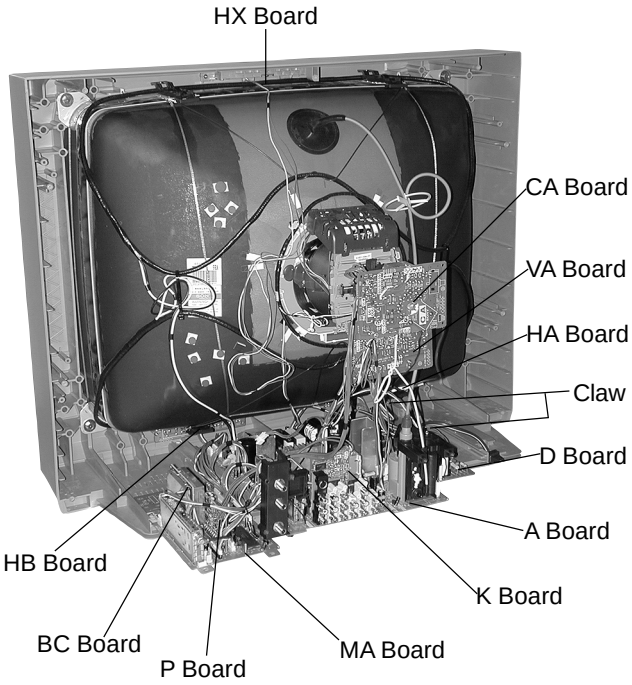


## 2-3. SERVICE POSITION

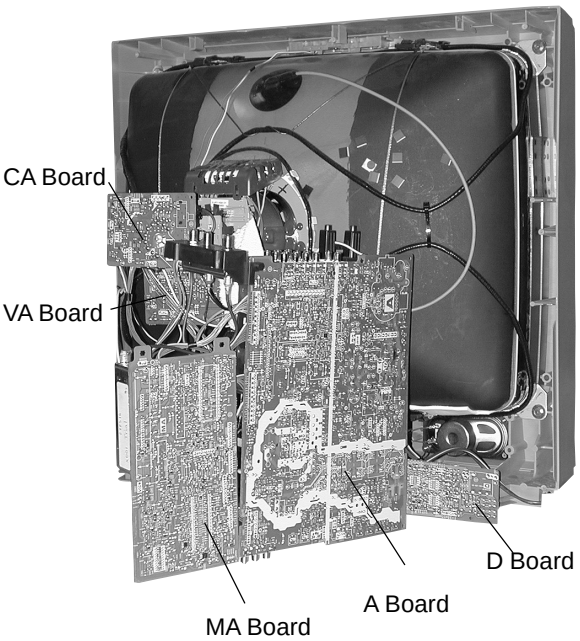

## 2-4. PICTURE TUBE REMOVAL

**WARNING:**
**BEFORE REMOVING**
**THE ANODE CAP**

High voltage remains in the CRT even after the power is disconnected. To avoid electric shock, discharge CRT ***before*** attempting to remove the anode cap. Short between anode and CRT coated earth ground strap.

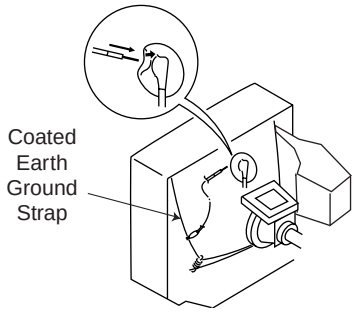


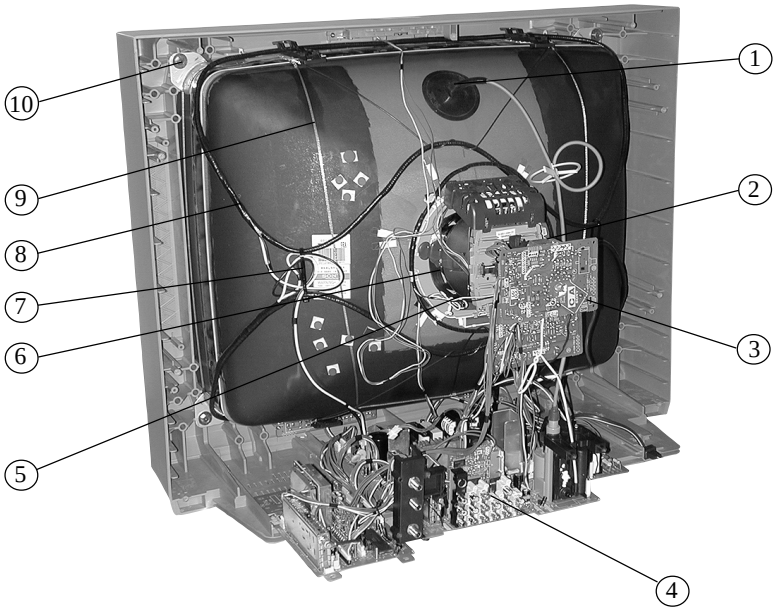


1. Discharge the anode of the CRT and remove the anode cap.
2. Unplug all interconnecting leads from the deflection yoke, neck assembly, degaussing coils and CRT grounding strap.
3. Remove the CA Board from the CRT.
4. Remove the chassis assembly.
5. Loosen the neck assembly fixing screw and remove.
6. Loosen the deflection yoke fixing screw and remove.
7. Place the set with the CRT face down on a cushion and remove the degaussing coil holders.
8. Remove the degaussing coils.
9. Remove the CRT grounding strap and spring tension devices.
10. Unscrew the four CRT fixing screws [located on each CRT corner] and remove the CRT [Take care not to handle the CRT by the neck].

## ANODE CAP REMOVAL

WARNING: High voltage remains in the CRT even after the power is disconnected. To avoid electrical shock, discharge the CRT **before** attempting to remove the anode cap. Short between anode and coated earth ground strap of CRT.

NOTE: After removing the anode, short circuit the anode of the picture tube and the anode cap to either the metal chassis, CRT shield, or carbon painted on the CRT.

### REMOVAL PROCEDURES

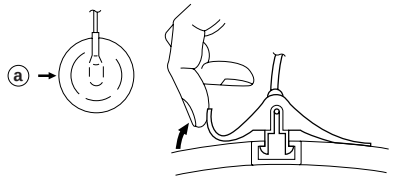


① Turn up one side of the rubber cap in the direction indicated by arrow ⓐ.

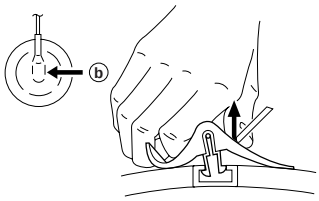


② Use your thumb to pull the rubber cap firmly in the direction indicated by arrow ⓑ.

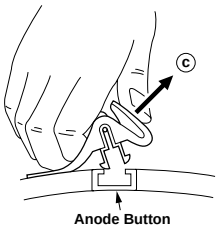


③ When one side of the rubber cap separates from the anode button, the anode cap can be removed by turning the rubber cap and pulling it in the direction of arrow ⓒ.

### HOW TO HANDLE AN ANODE CAP

① Do not use sharp objects which may cause damage to the surface of the anode cap.

② To avoid damaging the anode cap, do not squeeze the rubber covering too hard. A material fitting called a shatter-hook terminal is built into the rubber.

③ Do not force turn the foot of the rubber cover. This may cause the shatter-hook terminal to protrude and damage the rubber.

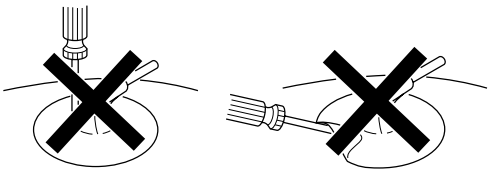

# SECTION 3
# SET-UP ADJUSTMENTS

The following adjustments should be made when a complete realignment is required or when a new picture tube is installed.

These adjustments should be performed with rated power supply voltage unless otherwise noted.

Set the controls as follows unless otherwise noted:

VIDEO MODE: STANDARD
PICTURE control: ..... Normal
BRIGHTNESS control: ..... Normal

Perform the adjustments in order as follows:

1. Beam Landing
2. Convergence
3. Focus
4. Screen (G2)
5. White Balance

**Note:** Test equipment required:

- Color Bar Pattern Generator
- Degausser
- DC Power Supply
- Digital Multimeter

## 3-1. BEAM LANDING

Before beginning adjustment procedure:

1. Degauss the entire screen.
2. Feed in the white pattern signal.

### Adjustment Procedure

1. Input a raster signal with the pattern generator.
2. Loosen the deflection yoke mounting screw and set the purity control to the center as shown below.

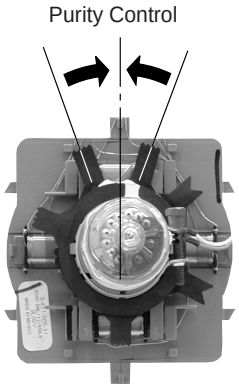


3. Turn the raster signal of the pattern generator to green.
4. Move the deflection yoke backward and adjust the purity control so that green is in the center and red and blue are at the sides evenly.

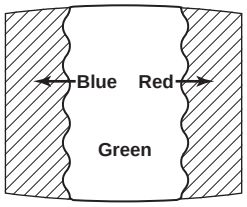


5. Move the deflection yoke forward and adjust so that the entire screen becomes green.

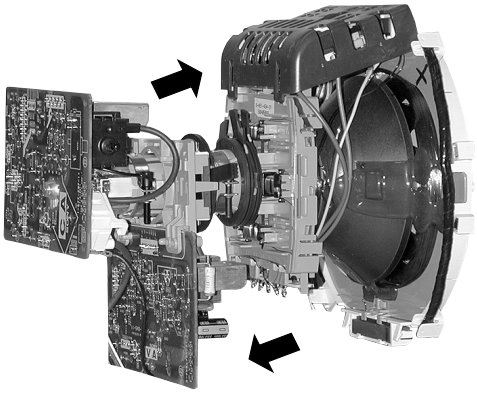

6. Switch over the raster signal to red and blue and confirm the condition.
7. When the position of the deflection yoke is determined, tighten it with the deflection yoke mounting screw.
8. If landing at the corner is not right, adjust by using the disk magnets.

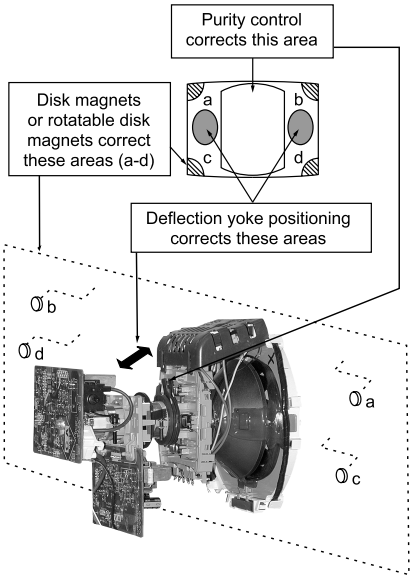

## 3-2. CONVERGENCE

Before starting convergence adjustments:

1. Perform FOCUS, V.LIN AND V.SIZE adjustments.
2. Set BRIGHTNESS control to minimum.
3. Feed in dot pattern.

### Vertical Static Convergence

1. Adjust V.STAT magnet to converge red, green and blue dots in the center of the screen (Vertical movement adjust V.STAT RV 701 to converge).

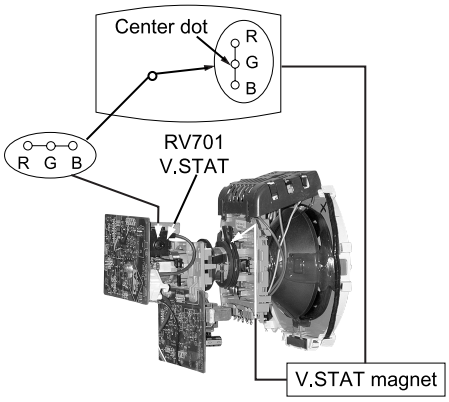


2. Tilt the V.STAT magnet and adjust static convergence to open or close the V.STAT magnet.

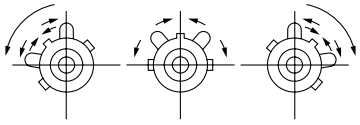

When the V.STAT magnet is moved in the direction of arrows a and b, red, green, and blue dots move as shown below:

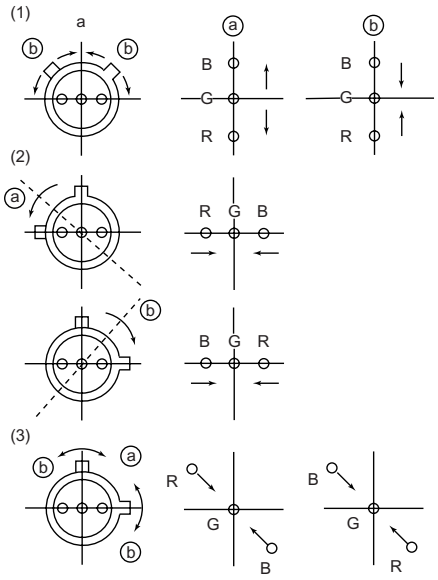


### Horizontal Static Convergence

If the blue dot does not converge with the red and green dots, perform the following:

1. Move BMC magnet (a) to correct insufficient H. Static convergence.
2. Rotate BMC magnet (b) to correct insufficient V. Static convergence.
3. After adjusting the BMC magnet, repeat Beam Landing Adjustment.

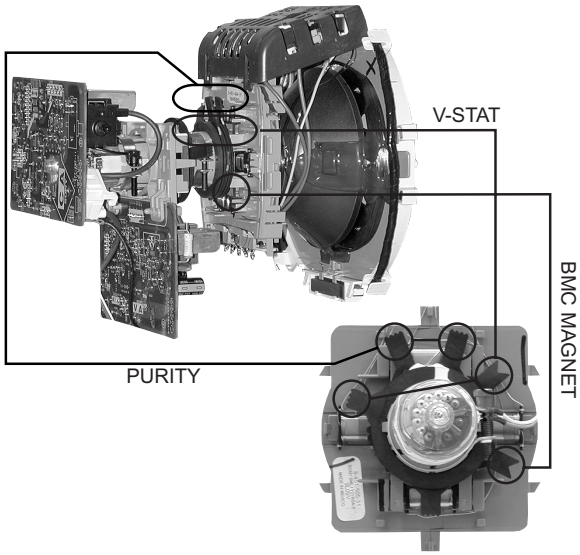


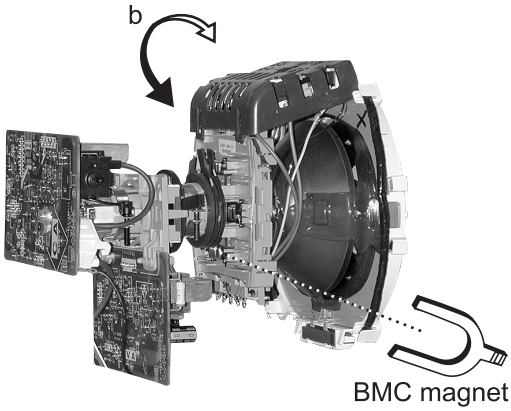


### Dynamic Convergence Adjustment

Before performing this adjustment, perform Horizontal and Vertical Static Convergence Adjustment.

1. Slightly loosen deflection yoke screw.
2. Remove deflection yoke spacers.
3. Move the deflection yoke for best convergence as shown on the following page.

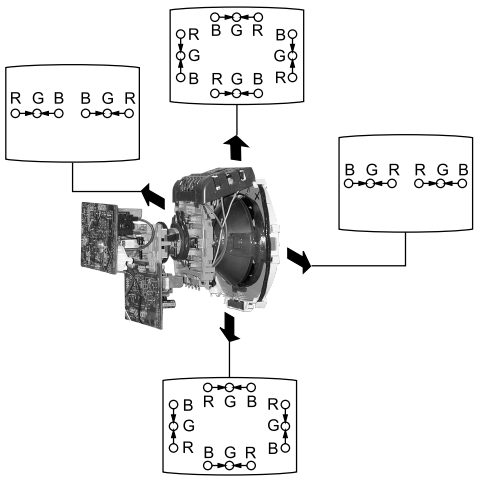


4. Tighten the deflection yoke screw.
5. Install the deflection yoke spacers.

## TLH Plate Adjustment

1. Input crosshatch pattern.
2. Adjust PICTURE QUALITY to standard, PICTURE and BRIGHTNESS to 50%, and OTHER to standard.
3. Adjust the Horizontal Convergence of red and blue dots by tilting the TLH plate on the deflection yoke.

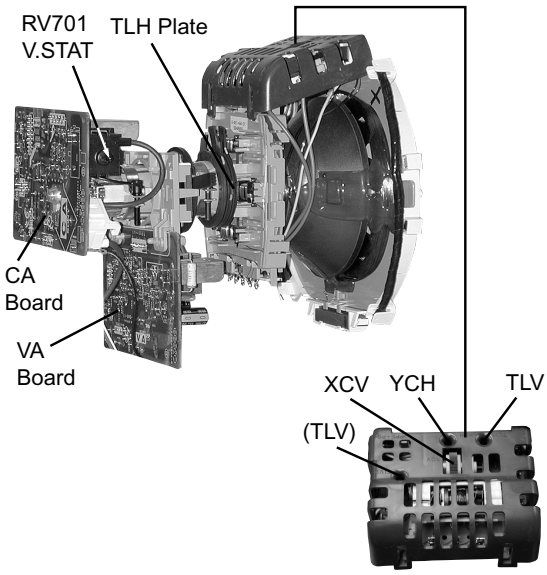


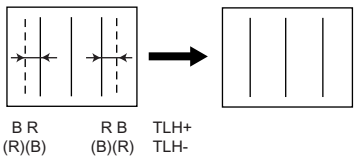


4. Adjust XCV core to balance X axis.
5. Adjust YCH VR to balance Y axis.
6. Adjust vertical red and blue convergence with V.TILT (TLV VR).

   Perform adjustments while tracking items 1 and 2.

## Screen-Corner Convergence

1. Affix a permalloy assembly corresponding to the misconverged areas.

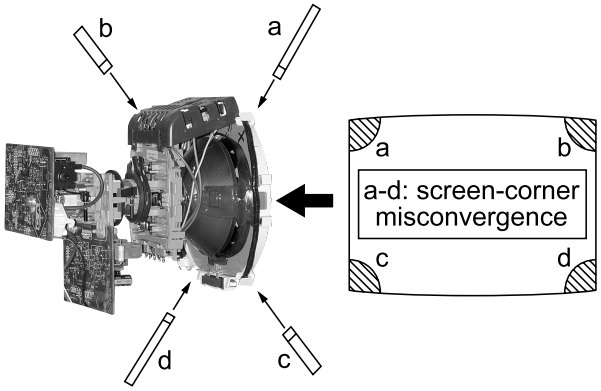


## 3-3. FOCUS

1. Adjust FOCUS control for best picture.

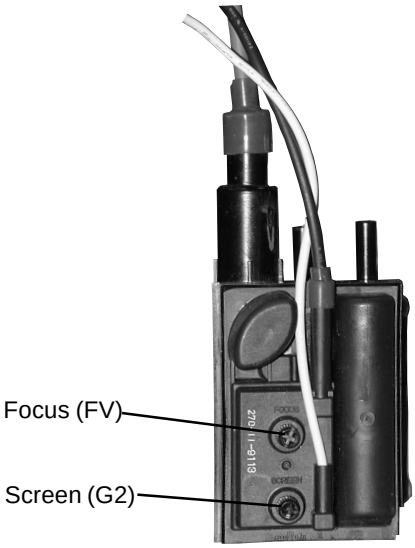

## 3-4. SCREEN (G2)

1. Input a dots pattern.
2. Set the PICTURE and BRIGHTNESS controls at minimum and COLOR control at normal.
3. Adjust SBRT, GCUT, BCUT in service mode with an oscilloscope as shown below so that voltages on the red, green, and blue cathodes are 170 ± 2.0 VDC.

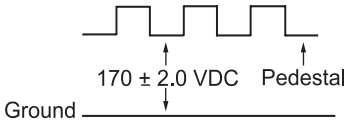


4. Observe the screen and adjust SCREEN (G2) VR in FBT to obtain the faintly visible background of dot signal.

## 3-5. METHOD OF SETTING THE SERVICE ADJUSTMENT MODE

### Service Mode Procedure

1. Standby mode (power off).
2. Display ➡ Channel 5 ➡ Sound volume + ➡ Power on the Remote Commander (press each button within a second).

### Service Adjustment Mode In

1. The CRT displays the item being adjusted.

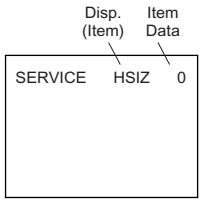


2. Press 1 or 4 on the Remote Commander to select the item.
3. Press 3 or 6 on the Remote Commander to change the data.
4. Press MUTING then ENTER to save into the memory.

### Service Adjustment Mode Memory

Turn set off then on to exit service adjustment mode.

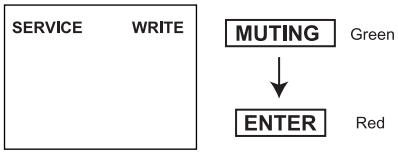


## 3-6. WHITE BALANCE ADJUSTMENTS

1. Input an entire white signal with burst.
2. Set to Service Adjustment Mode.
3. Set the PICTURE and BRIGHTNESS to minimum.
4. Adjust with SBRT if necessary.
5. Select GCUT and BCUT with 1 and 4 .
6. Adjust with 3 and 6 for the best white balance.
7. Set PICTURE and BRIGHTNESS to maximum.
8. Select GDRV and BDRV with 1 and 4 .
9. Adjust with 3 and 6 for the best white balance.
10. To write into memory, press MUTING then ENTER .

# SECTION 4
# SAFETY RELATED ADJUSTMENTS

## 4-1. ⋈ R564 CONFIRMATION METHOD (HV HOLD-DOWN CONFIRMATION) AND READJUSTMENTS

The following adjustments should always be performed when replacing the following components which are marked with ◪ on the schematic diagram:

| Part Replaced (◪) | Adjustment (⋈) |
|---|---|
| DY, T505, CRT, IC501, C507, C520, C505, C509, C515, T504, T503, C551, L510, C546, C537, C547, D517, D518, D519, R560, R561, R562, R563, R565, R566, R567, R525 ..... A Board<br><br>IC301 ..... MA Board | HV HOLD-DOWN<br>R564 |

### Preparation Before Confirmation

1. Using a Variac, apply AC input voltage: 120 ± 2 VAC.
2. Turn the POWER switch ON.
3. Input a white signal and set the PICTURE and BRIGHTNESS controls to maximum.
4. Confirm that the voltage between C546 (+) or TP503 and ground is more than 21.0 VDC (KV-27FV16/29FV16/29FV16C ONLY), 23.0 VDC (KV-32FS12/32FS16 ONLY).

### Hold-Down Operation Confirmation

1. Connect the current meter between Pin 11 of the FBT (T505) and the PWB land where Pin 11 would normally attach. (See Figure 1 on the next page.)
2. Input a dot signal and set PICTURE and BRIGHTNESS to minimum: IABL = 1730 ± 100 µA (KV-27FV16/29FV16/29FV16C ONLY), IABL = 2175 + 100/- 325 µA (KV-32FS12/32FS16 ONLY).
3. Confirm the voltage of A Board TP-600 is 135 ± 1.5 VDC.
4. Connect the digital voltmeter and the DC power supply via diode 1SS119 to C546 (+) and ground. (See Figure 1 on the next page.)
5. Increase the DC power voltage gradually until the picture blanks out.
6. Turn DC power source off immediately.
7. Read the digital voltmeter indication (standard < 24.78 +0.0/-0.1 VDC - KV-27FV16/29FV16/29FV16C ONLY) (standard < 27.24 + 0.0/- 0.1 VDC - KV-32FS12/32FS16 ONLY) .
8. Input a white signal and set PICTURE and BRIGHTNESS to maximum: IABL = 1730 ± 100 µA (KV-27FV16/29FV16/29FV16C ONLY), IABL = 2175 + 100/- 325 µA (KV-32FS12/32FS16 ONLY).
9. Repeat steps 4 to 7.

### Hold-Down Readjustment

If the setting indicated in step 2 of Hold-Down Operation Confirmation cannot be met, readjustment should be performed by altering the resistance value of R564 component marked with ⋈ .

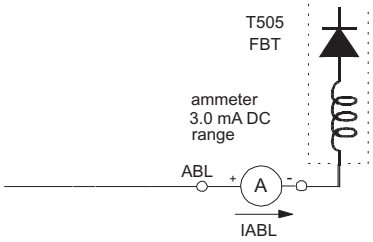


## 4-2. B+ VOLTAGE CONFIRMATION AND ADJUSTMENT

Note: The following adjustments should always be performed when replacing the following components, which are marked with ◪ on the schematic diagram on the A Board.

| **A BOARD:** | IC601, PH601 |
|---|---|

1. Using a Variac, apply AC input voltage: 130 + 2.0/-0.0 VAC.
2. Input a monoscope pattern.
3. Set the PICTURE and BRIGHTNESS controls to minimum.
4. Confirm that the voltage of A Board TP-600 is <136.5 VDC.
5. If step 3 is not satisfied, replace the components listed above, then repeat steps 1–3.

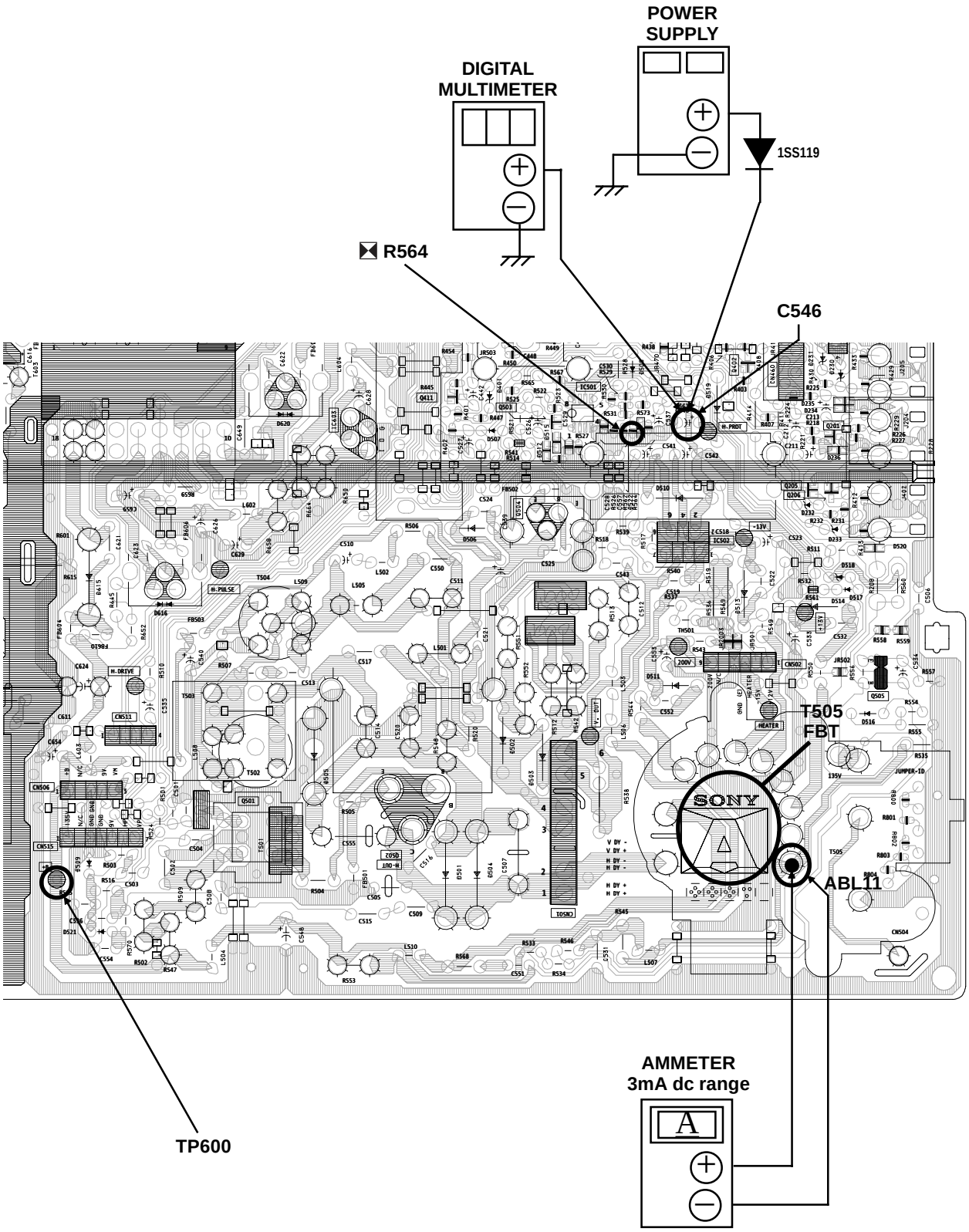
POWER
SUPPLY
DIGITAL
MULTIMETER
1SS119
R564
C546
T505
FBT
ABL11
AMMETER
3mA dc range
TP600

Figure 1

# SECTION 5
# CIRCUIT ADJUSTMENTS

## ELECTRICAL ADJUSTMENTS BY REMOTE COMMANDER

Use the Remote Commander (RM-Y168, RM-Y169 or RM-Y171) to perform the circuit adjustments in this section.

NOTE: Test Equipment Required:

- Pattern generator
- Frequency counter
- Digital multimeter
- Audio oscillator

## 5-1. SETTING THE SERVICE ADJUSTMENT MODE

1. Standby mode (power off).
2. Display ➡ Channel 5 ➡ Sound volume + ➡ Power on the Remote Commander (press each button within a second).

### Service Adjustment Mode On

1. The CRT displays the item being adjusted.

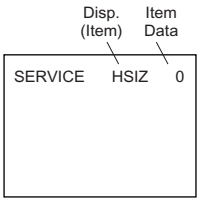


2. Press 1 or 4 on the Remote Commander to select an item.
3. Press 3 or 6 on the Remote Commander to change the data.
4. Press MUTING then ENTER to save into the memory.

### Service Adjustment Mode Memory

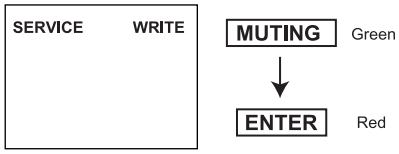


1. Press 8 then ENTER on the Remote Commander to initialize.

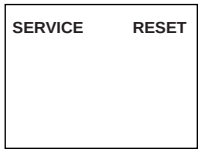


Carry out step 1 when adjusting IDs 0–4 and when replacing and adjusting IC003.

2. Turn set off then on to exit service adjustment mode.

## 5-2. MEMORY WRITE CONFIRMATION METHOD

1. After adjustment, remove the power plug from the AC outlet, then plug it in again.
2. Turn the power switch ON and set to service mode.
3. Call the adjusted items again to confirm they were adjusted.

## 5-3. ADJUSTMENT BUTTONS AND INDICATORS

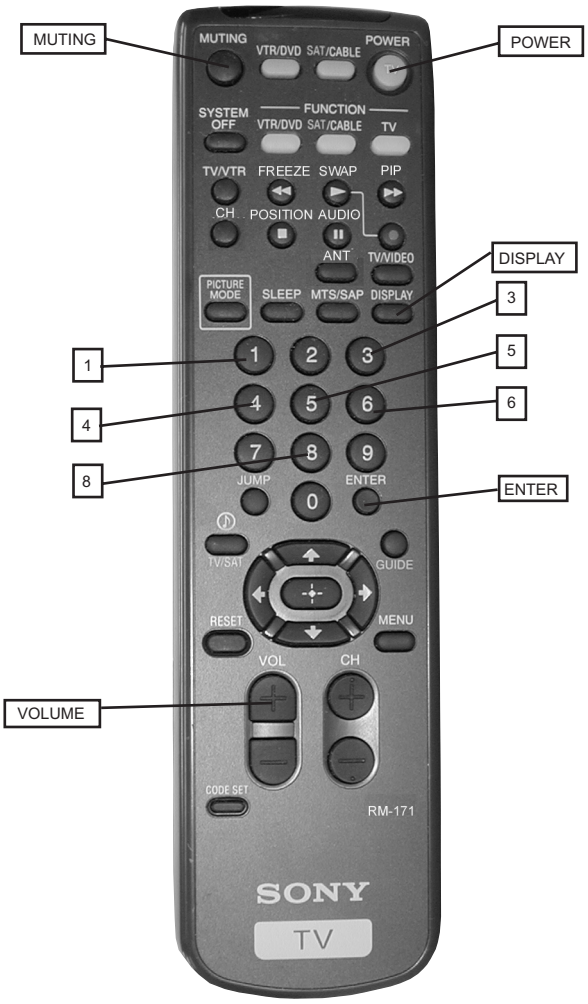


RM-Y171

## Adjustment Items

| Reg # | ITEM | FUNCTION | RANGE | FIX DATA | NTSC 27 | PAL M | PAL N | VIDEO | NTSC 32 | RF | AVERAGE DATA 27FV | AVERAGE DATA 32FS |
|---|---|---|---|---|---|---|---|---|---|---|---|---|
| 1 | HSIZ | Horizontal Size Adjustment | 0-63 | | 15 | 12 | 7 | | 18 | | 11 | 22 |
| 2 | HPOS | Horizontal Position Adjustment | 0-63 | | 13 | 8 | 9 | | 13 | | 20 | 22 |
| 3 | VBOW | Vertical Line Bowing Adj. | 0-15 | | 9 | 10 | 8 | | 9 | | 7 | 9 |
| 4 | VANG | Vertical Line Bowing Slant Adj. | 0-15 | | 8 | 10 | 9 | | 3 | | 9 | 7 |
| 5 | VTRP | TRAPEZIUM | 0-31 | | 19 | 14 | 14 | | 18 | | 21 | 17 |
| 6 | HTRP | Horiz. Trapezoid | 0-15 | | 6 | 7 | 5 | | 6 | | 0 | 2 |
| 7 | TROT | Tilt Correction | 0-63 | | 31 | 31 | 31 | | 31 | | 31 | 31 |
| 8 | PAMP | Horizontal PIN distortion Adj. | 0-63 | | 19 | 19 | 21 | | 27 | | 20 | 27 |
| 9 | UPIN | Upper PIN Distortion Adj. | 0-63 | | 34 | 33 | 36 | | 41 | | 37 | 38 |
| 10 | LPIN | Lower PIN Distortion Adj. | 0-63 | | 32 | 34 | 40 | | 39 | | 33 | 35 |
| 11 | VSIZ | Vertical Size Adjustment | 0-63 | | 32 | 43 | 29 | | 51 | | 33 | 51 |
| 12 | VPOS | Vertical Position Adj. | 0-63 | | 30 | 30 | 32 | | 42 | | 36 | 39 |
| 13 | VLIN | Vertical lineality Adj. | 0-15 | | 3 | 6 | 10 | | 5 | | 3 | 4 |
| 14 | SCOR | Vertical "S" Correction Adjustment | 0-15 | | 6 | 8 | 10 | | 8 | | 8 | 8 |
| 15 | VZOM | 16:9 CRT Z Mode on/off | 0-1 | 0 | | | | | | | 0 | 0 |
| 16 | EHT | Vertical High-Voltage Compensation | 0-15 | 5 | | | | | | | 5 | 5 |
| 17 | ASP | Aspect Ratio control | 0-63 | 47 | | | | | | | 47 | 47 |
| 18 | SCRL | 16:9 CRT Z Mode Trans. Scroll | 0-63 | 31 | | | | | | | 31 | 31 |
| 19 | HBLK | Horizontal Blanking on/off | 0-1 | 1 | | | | | | | 1 | 1 |
| 20 | LBLK | Left Blanking Adjustment | 0-15 | 13 | | | | | | | 13 | 13 |
| 21 | RBLK | Rigth Blanking Adjustment | 0-15 | 8 | | | | | | | 7 | 8 |
| 22 | HDW | Horizontal Drive Pulse Width | | 1 | | | | | | | 1 | 1 |
| 23 | EWDC | "Parabola" EW, D.C. Adjustment | 0-1 | 0 | | | | | | | 0 | 0 |
| 24 | LVLN | Lower Screen BTM Vertical Line Adj. | 0-15 | 0 | | | | | | | 0 | 0 |
| 25 | UVLN | Uppe Screen BTM Vertical Line Adj. | 0-15 | 0 | | | | | | | 0 | 0 |
| 26 | INTL | INTERLACE | 0-3 | 0 | | | | | | | 0 | 0 |
| 27 | G2SW | | 0-1 | 0 | | | | | | | 0 | 0 |
| 28 | G2LV | | 0-7 | 0 | | | | | | | 0 | 0 |
| 29 | HOSC | Horizontal VCO Oscillation Freq. | 0-15 | 7 | | | | | | | 7 | 7 |
| 30 | VSS | Vertical Sync Slice Level | 0-3 | 0 | | | | | | | 0 | 0 |
| 31 | HSS | Horizontal Sync Slice Level | 0-1 | 0 | | | | | | | 0 | 0 |
| 32 | HMSK | For Macro Vision | 0-1 | 0 | | | | | | | 0 | 0 |
| 33 | VTMS | Select Signal VTIM Pin | 0-3 | 0 | | | | | | | 0 | 0 |
| 34 | CDMD | Vertical Count Down Mode Switching | 0-3 | | * | * | * | 3 | | | 3 | 3 |
| 35 | AFC | AFC Loop Gain Switching | 0-3 | 0 | | | | | | | 0 | 0 |
| 36 | FIFR | Field Frequency | 0-3 | ** | | | | | | | 3 | 3 |
| 37 | VBLK | VBLKW | 0-3 | 0 | | | | | | | 0 | 0 |
| 38 | REFP | REFP | 0-1 | 0 | | | | | | | 0 | 0 |
| 39 | JPSW | JUMPSW | 0-1 | MENU | | | | | | | 0 | 0 |
| 40 | RDRV | R Output Drive control | 0-63 | *** | | | | | | | 31 | 40 |
| 41 | GDRV | G Output Drive control | 0-63 | 25 | | | | | | | 22 | 42 |
| 42 | BDRV | B Output Drive control | 0-63 | 25 | | | | | | | 21 | 31 |
| 43 | RCUT | R Output Cutoff control | 0-63 | 31 | | | | | | | 31 | 31 |
| 44 | GCUT | G Output Cutoff control | 0-63 | 15 | | | | | | | 13 | 12 |
| 45 | BCUT | B Output Cutoff control | 0-63 | 12 | | | | | | | 14 | 15 |
| 46 | SCON | SUB CONT | 0-15 | 8 | | | | | | | 11 | 11 |
| 47 | SHUE | Sub HUE adjustment | 0-15 | 16 | | | | | | | 17 | 16 |
| 48 | SCOL | Sub COLOR adjustment | 0-15 | | 16 | 16 | 16 | | | | 17 | 18 |
| 49 | SBRT | Sub BRIGHTNESS adjustment | 0-31 | 16 | | | | | | | 15 | 16 |
| 50 | CHUE | SUB COLOR (RF) | 0-31 | 7 | | | | | | | 6 | 6 |
| 51 | CCOL | SUB COLOR (RF) | 0-31 | | 7 | 7 | 7 | | | | 7 | 4 |
| 52 | UOFS | YUV U OFFSET | 0-15 | 7 | | | | | | | 7 | 7 |
| 53 | VOFS | YUV V OFFSET | 0-15 | 7 | | | | | | | 7 | 7 |
| 54 | RON | R Output on/off | 0-1 | 1 | | | | | | | 1 | 1 |
| 55 | GON | G Output on/off | 0-1 | 1 | | | | | | | 1 | 1 |
| 56 | BON | B Output on/off | 0-1 | 1 | | | | | | | 1 | 1 |
| 57 | AXPL | Axis PAL | 0-1 | 0 | | | | | | | 0 | 0 |
| 58 | AXNT | Axis NTSC | 0-1 | 1 | | | | | | | 1 | 1 |
| 59 | CBPF | Chroma BPF on/off | 0-1 | 1 | | | | | | | 1 | 1 |
| 60 | CTRP | Y TRAP FILTER on/off | 0-1 | 1 | | | | | | | 1 | 1 |
| 61 | COFF | Color On/off | 0-1 | 0 | | | | | | | 0 | 0 |
| 62 | KOFF | Set Color Killer | 0-1 | 0 | | | | | | | 0 | 0 |
| 63 | SSHP | Sub SHARPNESS | 0-15 | 5 | | | | | | | 5 | 5 |
| 64 | SHPF | SHARPNESS Circuit Fo | 0-3 | Palette | | | | | | | 2 | 2 |
| 65 | PREL | Pre-Shoot/ Over-Shoot | 0-1 | 1 | | | | | | | 0 | 0 |
| 66 | Y-DC | DC transmition Ratio Switching | 0-3 | Palette | | | | | | | 2 | 2 |
| 67 | GAMM | Gamma Correction | 0-3 | Palette | | | | | | | 2 | 2 |
| 68 | ABLM | ABL Mode Switch | 0-1 | 1 | | | | | | | 1 | 1 |
| 69 | VTH | ABL CD VHT Switching | 0-1 | 1 | | | | | | | 1 | 1 |
| 70 | YDEL | Y Delay Time Control | 0-15 | 7 | | | | | | | 7 | 7 |
| 71 | NCOL | No Color ID | 0-1 | 1 | | | | | | | 1 | 1 |
| 72 | FSC | FSC Out on/off | 0-1 | 1 | | | | | | | 1 | 1 |
| 73 | K-ID | Killer ID Control on/off | 0-1 | 0 | | | | | | | 0 | 0 |
| 74 | GDOF | | 0-31 | 3 | | | | | | | 3 | 3 |
| 75 | BDOF | | 0-31 | 16 | | | | | | | 16 | 16 |
| 76 | GCOF | | 0-31 | 16 | | | | | | | 16 | 16 |
| 77 | BCOF | | 0-31 | 7 | | | | | | | 7 | 7 |
| 78 | SYSC | Color System | 0-7 | 4 | | | | | | | 4 | 4 |
| 79 | VENH | Vertical Enhancement | 0-7 | Palette | | | | | | | 5 | 3 |

| Reg # | ITEM | FUNCTION | RANGE | FIX DATA | NTSC 27 | PAL M | PAL N | VIDEO | NTSC 32 | RF | AVERAGE DATA 27FV | AVERAGE DATA 32FS |
|---|---|---|---|---|---|---|---|---|---|---|---|---|
| 80 | PDSO | PDS OFF | 0-1 | 0 | | | | | | | 0 | 0 |
| 81 | CK | CK | 0-1 | 0 | | | | | | | 0 | 0 |
| 82 | VNL | VNL | 0-15 | 3 | | | | | | | 3 | 3 |
| 83 | HPK | HPK | 0-1 | 0 | | | | | | | 0 | 0 |
| 84 | HPKO | HPK OFF | 0-1 | Palette | | | | | | | 0 | 0 |
| 85 | CORE | CORE | 0-3 | 2 | | | | | | | 1 | 1 |
| 86 | TRAP | TRAP | 0-1 | 1 | | | | | | | 1 | 1 |
| 87 | CHTR | CH TRAP | 0-1 | 0 | | | | | | | 0 | 0 |
| 88 | CBPF | CBPF | 0-1 | 1 | | | | | | | 1 | 1 |
| 89 | ENHO | ENHOFF | 0-1 | 0 | | | | | | | 0 | 0 |
| 90 | NMRD | NMRD | 0-3 | 0 | | | | | | | 0 | 0 |
| 91 | YAPS | YAPS | 0-3 | 3 | | | | | | | 3 | 3 |
| 92 | CLKS | CLKS | 0-3 | 0 | | | | | | | 0 | 0 |
| 93 | NSTD | NSTDS | 0-3 | 0 | | | | | | | 0 | 0 |
| 94 | MSS | MSS | 0-3 | 0 | | | | | | | 0 | 0 |
| 95 | KILS | KILS | 0-3 | 1 | | | | | | | 1 | 1 |
| 96 | ADIN | ADIN | 0-1 | 0 | | | | | | | 0 | 0 |
| 97 | EXCS | EXCSS | 0-3 | 1 | | | | | | | 1 | 1 |
| 98 | CPP | CPP | 0-3 | 2 | | | | | | | 2 | 2 |
| 99 | HDP | HDP | 0-7 | 4 | | | | | | | 4 | 4 |
| 100 | CDL | CDL | 0-7 | 4 | | | | | | | 4 | 4 |
| 101 | DYCR | DYCOR | 0-15 | 2 | | | | | | | 2 | 2 |
| 102 | DYGN | DYGAIN | 0-15 | 10 | | | | | | | 10 | 10 |
| 103 | DCCR | DCCOR | 0-15 | 3 | | | | | | | 3 | 3 |
| 104 | DCGN | DCGAIN | 0-15 | 6 | | | | | | | 6 | 6 |
| 105 | YNRL | YNRLIM | 0-3 | 1 | | | | | | | 1 | 1 |
| 106 | CNRL | CNRLIM | 0-3 | 1 | | | | | | | 1 | 1 |
| 107 | WSC | WSC | 0-3 | 1 | | | | | | | 1 | 1 |
| 108 | VTRH | VTRH | 0-3 | 1 | | | | | | | 1 | 1 |
| 109 | VTRR | VTRR | 0-3 | 1 | | | | | | | 1 | 1 |
| 110 | LDSR | LDSR | 0-3 | 2 | | | | | | | 2 | 2 |
| 111 | VAPG | VAPGAIN | 0-7 | 3 | | | | | | | 3 | 3 |
| 112 | VAPI | VAPINV | 0-31 | 6 | | | | | | | 6 | 6 |
| 113 | TEST | TEST | 0-1 | 0 | | | | | | | 0 | 0 |
| 114 | YPFT | YPFT | 0-3 | 3 | | | | | | | 3 | 3 |
| 115 | YPFG | YPFG | 0-15 | 7 | | | | | | | 7 | 7 |
| 116 | CC3N | CC3N | 0-1 | 0 | | | | | | | 0 | 0 |
| 117 | SELD | | 0-1 | 1 | | | | | | | 1 | 1 |
| 118 | D2GN | D2GAIN | 0-7 | 4 | | | | | | | 5 | 5 |
| 119 | YHCR | YHCOR | 0-3 | 0 | | | | | | | 0 | 0 |
| 120 | YPFC | YPFCOR | 0-1 | 0 | | | | | | | 0 | 0 |
| 121 | SHT | SHT | 0-3 | 0 | | | | | | | 0 | 0 |
| 122 | MVT | MVT | 0-1 | 0 | | | | | | | 0 | 0 |
| 123 | OTT | OTT | 0-1 | 0 | | | | | | | 0 | 0 |
| 124 | CL2D | CL2D | 0-1 | 1 | | | | | | | 1 | 1 |
| 125 | CLKG | CLKGGT | 0-1 | 0 | | | | | | | 0 | 0 |
| 126 | HPLL | HPLLFS | 0-1 | 1 | | | | | | | 1 | 1 |
| 127 | BPLL | BPLLFS | 0-1 | 0 | | | | | | | 0 | 0 |
| 128 | FSCF | FSCFG | 0-1 | 0 | | | | | | | 0 | 0 |
| 129 | PLLS | PLLS | 0-1 | 1 | | | | | | | 1 | 1 |
| 130 | KILR | KILR | 0-15 | 3 | | | | | | | 3 | 3 |
| 131 | HSSL | HSSL | 0-15 | 12 | | | | | | | 12 | 12 |
| 132 | VSSL | VSSL | 0-15 | 8 | | | | | | | 8 | 8 |
| 133 | BGPS | BGPS | 0-15 | 4 | | | | | | | 4 | 4 |
| 134 | BGPW | BGPW | 0-15 | 10 | | | | | | | 10 | 10 |
| 135 | ADCK | ADCLKS | 0-3 | 3 | | | | | | | 3 | 3 |
| 136 | NDSW | NSDSW | 0-1 | 1 | | | | | | | 1 | 1 |
| 137 | PFRN | FREE_RUN | 0-1 | 0 | | | | | | | 0 | 0 |
| 138 | PRVS | RVS | 0-1 | 0 | | | | | | | 0 | 0 |
| 139 | PCON | CONTRAST | 0-127 | 45 | | | | | | | 45 | 45 |
| 140 | PUCO | U-DAC | 0-127 | 16 | | | | | | | 16 | 16 |
| 141 | PVCO | V-DAC | 0-127 | 24 | | | | | | | 24 | 24 |
| 142 | PHUE | | 0-31 | 15 | | | | | | | 15 | 15 |
| 143 | PKIL | KILLER | 1 | 0 | | | | | | | 0 | 0 |
| 144 | PSEP | EXT_SC_SEL | 0-3 | 2 | | | | | | | 2 | 2 |
| 145 | PHIM | | 0-1 | 0 | | | | | | | 0 | 0 |
| 146 | PSUB | | 0-1 | 0 | | | | | | | 0 | 0 |
| 147 | PBGS | BG_START | 0-63 | 14 | | | | | | | 14 | 14 |
| 148 | PDL0 | | 0-15 | 6 | | | | | | | 6 | 6 |
| 149 | PDL1 | | 0-15 | 13 | | | | | | | 13 | 13 |
| 150 | PBRT | Y_OFFSET | 0-31 | 25 | | | | | | | 25 | 25 |
| 151 | PVP1 | | | 0 | | | | | | | 0 | 0 |
| 152 | PUP1 | | | 0 | | | | | | | 0 | 0 |
| 153 | PVP2 | | | 0 | | | | | | | 0 | 0 |
| 154 | PUP2 | | | 0 | | | | | | | 0 | 0 |
| 155 | PVP3 | | | 0 | | | | | | | 0 | 0 |
| 156 | PUP3 | | | 0 | | | | | | | 0 | 0 |
| 157 | PACS | SET_ACC | 0-1 | 1 | | | | | | | 1 | 1 |
| 158 | PSDL | SYNC_DELAY | 0-3 | 0 | | | | | | | 0 | 0 |

| Reg # | ITEM | FUNCTION | RANGE | FIX DATA | NTSC 27 | PAL M | PAL N | VIDEO | NTSC 32 | RF | AVERAGE DATA 27FV | AVERAGE DATA 32FS |
|---|---|---|---|---|---|---|---|---|---|---|---|---|
| 159 | PDCO | | 0-3 | 0 | | | | | | | 0 | 0 |
| 160 | PCGA | C_GAIN | 0-1 | 1 | | | | | | | 1 | 1 |
| 161 | PAAF | | 0-1 | 0 | | | | | | | 0 | 0 |
| 162 | PSU2 | | 0-1 | 0 | | | | | | | 0 | 0 |
| 163 | PCVF | | 0-1 | 0 | | | | | | | 0 | 0 |
| 164 | PBIT | BITSEL | 0-1 | 0 | | | | | | | 0 | 0 |
| 165 | PAFC | AFCBITSEL | 0-1 | 0 | | | | | | | 0 | 0 |
| 166 | PACC | ACC_LEVEL | 0-63 | 22 | | | | | | | 22 | 22 |
| 167 | PBUR | BURST_CLK | 0-1 | 0 | | | | | | | 0 | 0 |
| 168 | PEVE | EVENUPRA | 0-1 | 0 | | | | | | | 0 | 0 |
| 169 | PINW | INV_WFF | 0-1 | 0 | | | | | | | 0 | 0 |
| 170 | PINR | INV_REF | 0-1 | 0 | | | | | | | 0 | 0 |
| 171 | PREF | RFF_FIX | 0-1 | 0 | | | | | | | 0 | 0 |
| 172 | PARE | AUTO_REF | 0-1 | 1 | | | | | | | 1 | 1 |
| 173 | PAVE | AVERAGE | 0-1 | 0 | | | | | | | 0 | 0 |
| 174 | PFRA | FREE_RUN_ADJ | 0-15 | 0 | | | | | | | 0 | 0 |
| 175 | PPAL | SUB_PALM_JUDGE | 0-255 | 0 | | | | | | | 0 | 0 |
| 176 | PHPO | | 0-31 | 6 | | | | | | | 7 | 6 |
| 177 | PVPO | | 0-31 | 22 | | | | | | | 22 | 22 |
| 178 | PHTI | HT | 0-15 | 7 | | | | | | | 9 | 9 |
| 179 | PHAJ | ADJ | 0-15 | 1 | | | | | | | 1 | 1 |
| 180 | PBGY | BGY | 0-15 | 0 | | | | | | | 0 | 0 |
| 181 | PCRO | CROSS_SEL | 0-1 | 0 | | | | | | | 0 | 0 |
| 182 | PPAR | PALRY | 0-63 | 2 | | | | | | | 2 | 2 |
| 183 | PHPF | HPFOFF | 0-1 | 0 | | | | | | | 0 | 0 |
| 184 | PFSC | FSC_OUTPUT | 0-1 | 0 | | | | | | | 0 | 0 |
| 185 | PVCH | SET_VCHIP | 0-1 | 0 | | | | | | | 0 | 0 |
| 186 | PVON | VCHIP_ONLY | 0-1 | 1 | | | | | | | 1 | 1 |
| 187 | PVLN | LINE_NUM | 0-31 | 17 | | | | | | | 17 | 17 |
| 188 | PVSB | STB_DLY | 0-255 | 64 | | | | | | | 64 | 64 |
| 189 | PVLV | L_LEVEL | 0-255 | 130 | | | | | | | 130 | 130 |
| 190 | SBAL | Sub Balance | 0-7 | 5 | | | | | | | 5 | 5 |
| 191 | SBAS | Sub Bass | 0-7 | 0 | | | | | | | 0 | 0 |
| 192 | STRE | Sub Trebble | 0-7 | 3 | | | | | | | 3 | 3 |
| 193 | BBEL | BBE Low | 0-15 | 0 | **** | | | | | | 0 | 0 |
| 194 | BBEH | BBE High | 0-15 | 0 | ***** | | | | | | 0 | 0 |
| 195 | BBE | BBE | 0-1 | 0 | ****** | | | | | | 0 | 0 |
| 196 | AUX | SRS, Simulated | 0-3 | 0 | 0 | | | | | | 0 | 0 |
| 197 | DISP | O.S.D Display position | 0-127 | 20 | | | | | | | 32 | 34 |
| 198 | HCLW | Horizontal Count lower limit | 0-255 | 16 | | | | 16 | | | 16 | 16 |
| 199 | HCHG | Horizontal Count High limit | 0-255 | 64 | | | | 64 | | | 64 | 64 |
| 200 | ID0 | | 0-255 | 89 | | | | | | | See ID Map | |
| 201 | ID1 | | 0-255 | 31 | | | | | | | See ID Map | |
| 202 | ID2 | | 0-255 | 79 | | | | | | | See ID Map | |
| 203 | ID3 | | 0-255 | 146 | | | | | | | See ID Map | |
| 204 | ID4 | | 0-255 | 137 | | | | | | | See ID Map | |
| 205 | ID5 | | 0-255 | 19 | | | | | | | See ID Map | |
| 206 | ID6 | | 0-255 | 0 | | | | | | | See ID Map | |

* CDMD = 3 for US & CND, CDMD = 0 for Other
** FIFR = 3 for NTSC models, FIFR = 1 for Trinorma models
*** 41 for 27FS/32FS families, 31 for 27FV family
**** BBEL = 5 for 27FV family; 6 for 29FV family and 0 for 32FS family
***** BBEH = 5 for 27FV family; 7 for 29FV family and 0 for 32FS family
****** BBE = 1 for 27FV/29FV families and 0 for 32FS family

| SERVICE | ID0 | 25 |
|---|---|---|

Notes:

No. 1–206 show the order that each adjustment mode may be selected while in service mode. Data Range shows the range of possible settings for each adjustment mode. Initial Data shows the standard settings for each adjustment mode.

## Feature ID Map

| Model | Destination | ID-0 | ID-1 | ID-2 | ID-3 | ID-4 | ID-5 | ID-6 |
|---|---|---|---|---|---|---|---|---|
| KV-27FV16 | US | 89 | 63 | 239 | 146 | 133 | 19 | 7 |
| KV-27FV16 | CND | 89 | 63 | 239 | 178 | 133 | 19 | 7 |
| KV-29FV16 | E | 17 | 63 | 255 | 130 | 229 | 19 | 7 |
| KV-29FV16C | E | 17 | 63 | 255 | 130 | 229 | 19 | 7 |
| KV-32FS12 | US | 89 | 31 | 79 | 146 | 137 | 19 | 0 |
| KV-32FS12 | CND | 89 | 31 | 79 | 178 | 137 | 19 | 0 |
| KV-32FS16 | US | 89 | 31 | 79 | 146 | 137 | 19 | 7 |
| KV-32FS16 | CND | 89 | 31 | 79 | 178 | 137 | 19 | 7 |

## 5-4. MA BOARD ADJUSTMENTS

### H. Frequency (Free Run) Check

1. Input a TV mode (RF) with no signal.
2. Connect a frequency counter to base of Q501 (TP-500 H. DRIVE) on the A Board.
3. Check H. Frequency for 15735 ± 200 Hz

### V. Frequency (Free Run) Check

1. Select video 1 with no signal input.
2. Set the conditions for a standard setting.
3. Connect the frequency counter to TP-508 (V OUT) or CN501pin ⑥ (V DY+) and ground on the A Board .
4. Check that V. Frequency shows 60 ± 4 Hz.

### Drive (RDRV)

1. Input a color-bar signal and set the level to 75%.
2. In Standard mode, set PICTURE to maximum and COLOR to minimum.
3. Activate the Service Adjustment Mode.
4. Set both GON and BON items. Using [3] and [6]; set each to the following values. Leave RON set to "1".

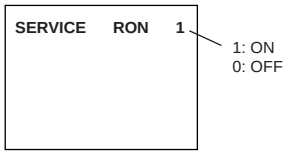


| | | |
|---|---|---|
| R ON: | ON | (1) |
| G ON: | OFF | (0) |
| B ON: | OFF | (0) |

5. Connect an oscilloscope probe to CA Board, J701 Pin 12 (KR) (Red Out) .
6. Select RDRV with [1] and [4] .
7. Adjust the value of RDRV with [3] and [6] for 92.5 ± 3 VDC.

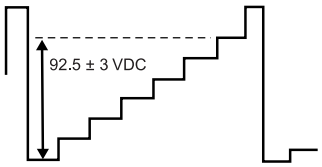


8. Reset GON and BON values to "1".

| | | |
|---|---|---|
| R ON: | ON | (1) |
| G ON: | ON | (1) |
| B ON: | ON | (1) |

9. Reset Picture and Color to normal values:

| | |
|---|---|
| PICTURE: | MAX |
| COLOR: | CENTER |

10. Press [MUTING] then [ENTER] to save into the memory.

### Display Position Adjustment (DISP)

1. Input a color-bar signal.
2. Set to Service Adjustment Mode.
3. Select DISP with [1] and [4] .
4. Adjust values of DISP with [3] and [6] to adjust characters to the center.
5. Write to memory by pressing [MUTING] then [ENTER] .
6. Check to see if the text is displayed on the screen.

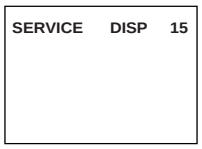


### Sub Bright Adjustment (SBRT)

1. Input a monoscope signal.
2. Activate the Service Adjustment Mode.
3. Set the PICTURE and BRIGHTNESS to minimum.
4. Select the SBRT item with [1] and [4] .
5. Adjust the values of SBRT with [3] and [6] to obtain a faintly visible crosshatch.
6. Press [MUTING] then [ENTER] to save into the memory.

### Sub Hue, Sub Color Adjustment (CHUE, CCOL)

1. Input a color-bar signal and set level to 75%.
2. Activate the Service Adjustment Mode.
3. Connect an oscilloscope probe to CA Board, CN705 Pin ④.
4. Select the CHUE and CCOL item with [1] and [4] .
5. While showing the CHUE item, adjust the waveform with [3] and [6] until the second and third bars show the same level (V2 = V3 < 0.1 Vp-p).
6. While showing the CCOL item, adjust the waveform with [3] and [6] until the first and fourth bars show the same level (V1 = V4 < 0.1 Vp-p).

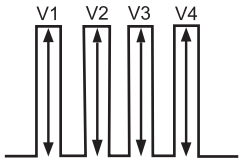


7. Press [MUTING] then [ENTER] to save into the memory.

### V. Size Adjustment (VSIZ)

1. Input a crosshatch signal.
2. Activate the Service Adjustment Mode.
3. Select the VSIZ item with [1] and [4] .
4. Adjust value of VPOS with [3] and [6] for the best vertical center.
5. Press [MUTING] then [ENTER] to save into the memory.

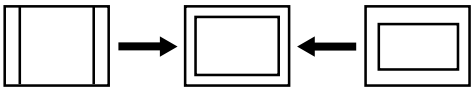

## V. Center Adjustment (VPOS)

Perform this adjustment after performing H. Frequency (Free Run) Check.

1. Input a crosshatch signal.
2. Activate the Service Adjustment Mode.
3. Select the VPOS item with [1] and [4] .
4. Adjust value of VPOS with [3] and [6] for the best vertical center.
5. Press [MUTING] then [ENTER] to save into the memory.

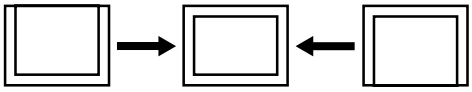

## H. Center Adjustment (HPOS)

Perform this adjustment after performing H. Frequency (Free Run) Check.

1. Input a crosshatch signal.
2. Activate the Service Adjustment Mode.
3. Select the HPOS item with [1] and [4] .
4. Adjust the value of HPOS with [3] and [6] for the best horizontal center.
5. Press [MUTING] then [ENTER] to save into the memory.

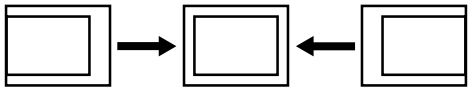

## H. Size Adjustment (HSIZ)

1. Input a monoscope signal.
2. Activate the Service Adjustment Mode.
3. Select HSIZ with [1] and [4] .
4. Adjust with [3] and [6] for the best horizontal size.
5. Press [MUTING] then [ENTER] to save into the memory.

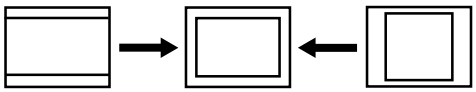

## V. Linearity (VLIN), V. Correction (VSCO), Pin Amp (PAMP), and Horizontal Trapezoid (TRAP) Adjustments

1. Input a crosshatch signal.
2. Activate the Service Adjustment Mode.
3. Select VLIN, VSCO, PAMP, and PPHA with with [1] and [4].
4. Adjust with [3] and [6] for the best horizontal size.
5. Press [MUTING] then [ENTER] to save into the memory.

V LINEARITY (VLIN)

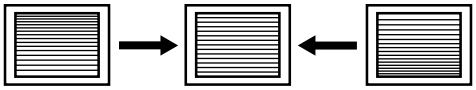

V CORRECTION (VSCO)

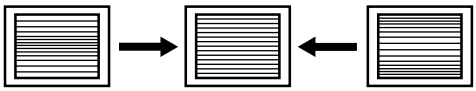

PIN AMP (PAMP)

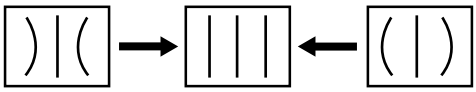

HORIZONTAL TRAPEZOID (TRAP)

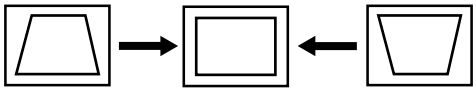

## V. Angle (VANG), V. Bow (VBOW), Upper pin (UPIN) and Low Pin (LPIN) Adjustments

1. Input a crosshatch signal.
2. Activate the Service Adjustment Mode.
3. Select VANG, VBOW, UPIN, and LPIN with [1] and [4].
4. Adjust with [3] and [6] for the best picture.
5. Press [MUTING] then [ENTER] to save into the memory.

V ANGLE (VANG)

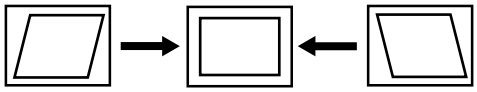

V BOW (VBOW)

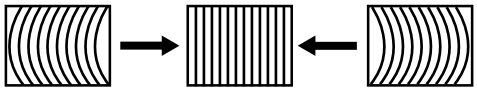

UPPER PIN (UPIN)

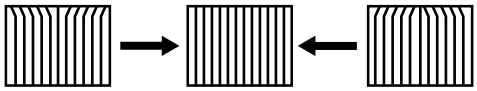

LOW PIN (LPIN)

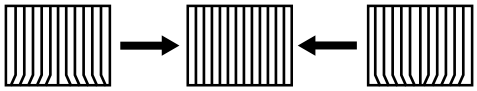

## Service Adjustment Mode Memory

1. Change the value of the DCOL item to “1”.
2. After completing all adjustments, press [0] then [ENTER] .

Read From Memory

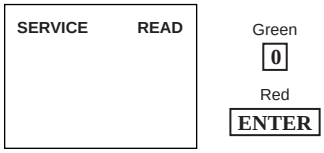

NOTES:

NOTES:

NOTES:

# SECTION 6
# DIAGRAMS

## 6.1 BLOCK DIAGRAM

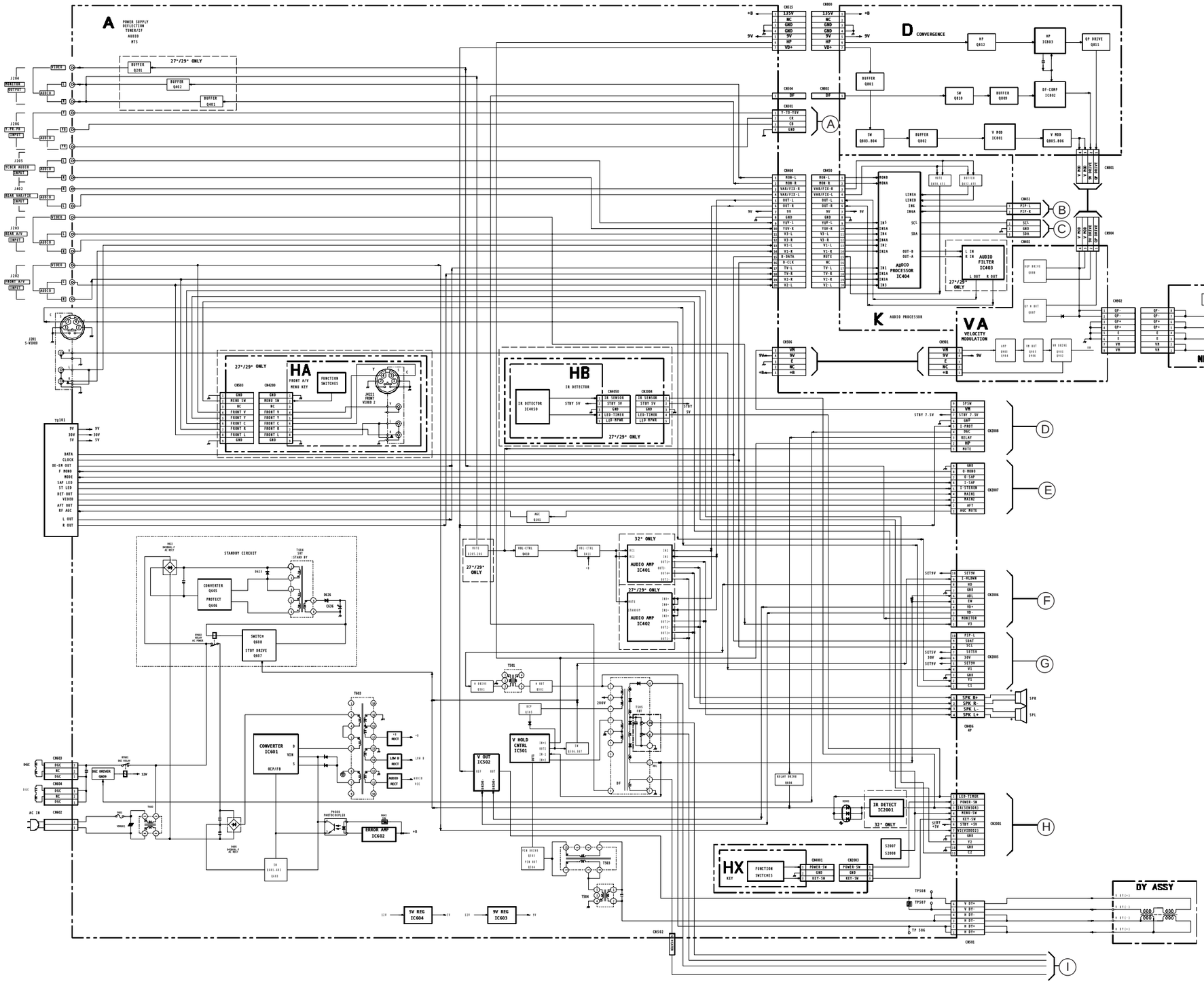

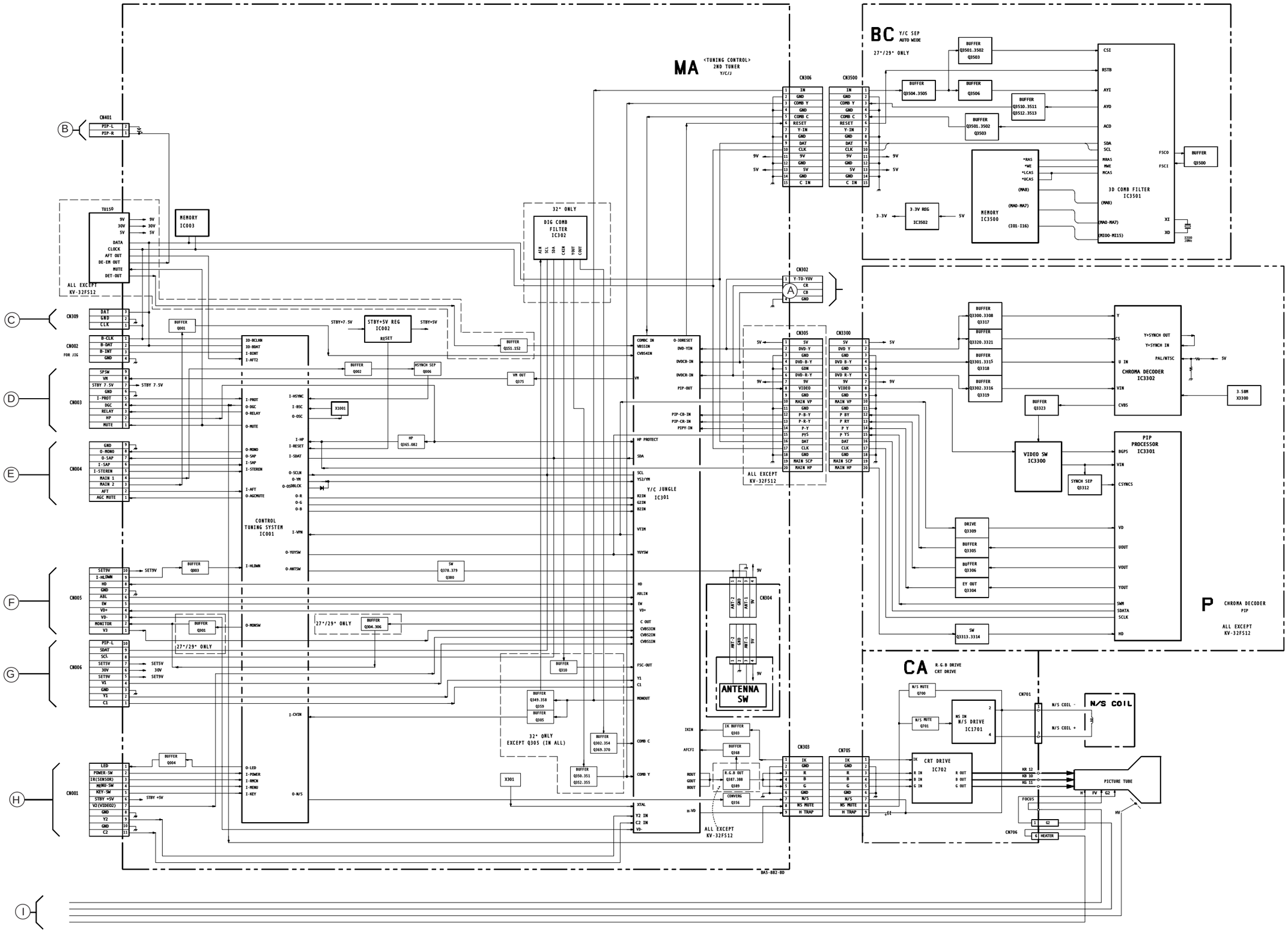
MA
<TUNING CONTROL>
2ND TUNER
Y/C/J
BC
Y/C SEP
AUTO WIDE
27*/29* ONLY
3D COMB FILTER
IC3501
MEMORY
IC3500
3.3V REG
IC3502
CN306
CN3500
CN401
TU150
MEMORY
IC003
ALL EXCEPT
KV-32FS12
32* ONLY
DIG COMB
FILTER
IC302
CN302
CN309
CN002
FOR JIG
CN003
CN004
CN005
CN006
CN001
STBY+5V REG
IC002
RESET
CONTROL
TUNING SYSTEM
IC001
Y/C JUNGLE
IC301
CN305
CN3300
CHROMA DECODER
IC3302
PIP
PROCESSOR
IC3301
VIDEO SW
IC3300
P
CHROMA DECODER
PIP
ANTENNA
SW
CN304
32* ONLY
EXCEPT Q305 (IN ALL)
CN303
CN705
CA
R.G.B DRIVE
CRT DRIVE
N/S DRIVE
IC1701
CRT DRIVE
IC702
N/S COIL
PICTURE TUBE
CN701
CN706
BA5-882-BD

## 6.2 CIRCUIT BOARD LOCATIONS

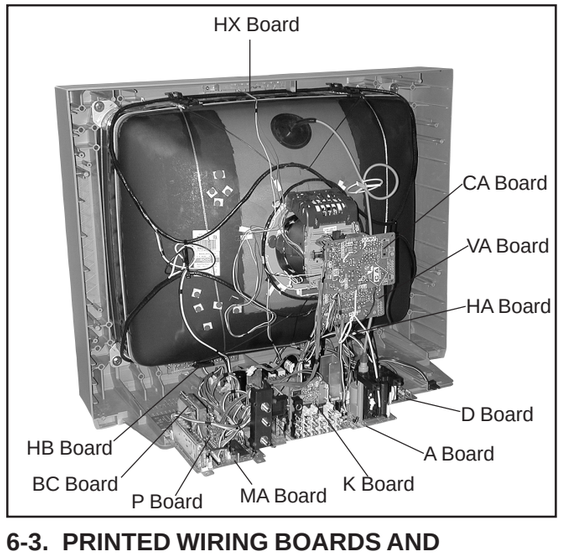


## 6-3. PRINTED WIRING BOARDS AND SCHEMATIC DIAGRAMS

- All capacitors are in µF unless otherwise noted. pF: µµF 50 WV or less are not indicated except for electrolytic and tantalums.
- All electrolytics are 50V unless otherwise specified.
- Indication of resistance, which does not have one for rating electrical power, is as follows:

  Pitch: 5mm

  Rating electrical power 1/4W (CHIP: 1/10W)
- All resistors are in ohms.

  KΩ = 1000Ω  MΩ = 1000KΩ
- : nonflammable resistor
- : fusible resistor
- : internal component
- : panel designation and adjustment for repair
- : earth-ground
- : earth-chassis
- All variable and adjustable resistors have characteristic curve B, unless otherwise noted.
- The components identified by ⧓ in this manual have been carefully factory-selected for each set in order to satisfy regulations regarding X-ray radiation. Should replacement be required, replace only with the value originally used.
- When replacing components identified by ◪, make the necessary adjustments indicated. If results do not meet the specified value, change the component identified by ⧓ and repeat the adjustment until the specified value is achieved (refer to Safety Related Adjustments on page 20).
- When replacing parts shown in the table below, be sure to perform the related adjustments.

| Part Replaced (◪) | Adjustment (⧓) |
|---|---|
| DY, T505, CRT, IC501, C507, C520, C505, C509, C515, T504, T503, C551, L510, C546, C537, C547, D517, D518, D519, R560, R561, R562, R563, R565, R566, R567, R525.....A Board<br>IC301.....MA Board | HV HOLD-DOWN (R564) |
| IC601, PH601.....A Board | B+ VOLTAGE CONFIRMATION |

• All voltages are in Volts

- Voltage is DC with respect to ground unless otherwise noted.
- Readings are taken with a 10MΩ digital multimeter.
- Readings are taken with a color-bar signal input.
- Voltage variations may be noted due to normal production tolerance.
- Circled numbers are waveform references.
- * : cannot be measured
- ▬▬ : B + Line
- - - - - : B – Line
- ⇨ : Signal path

**Reference Information**

| | | | |
|---|---|---|---|
| RESISTOR | : | RN | METAL FILM |
| | : | RC | SOLID |
| | : | FPRD | NON FLAMMABLE CARBON |
| | : | FUSE | NON FLAMMABLE FUSIBLE |
| | : | RW | NON FLAMMABLE WIREWOUND |
| | : | RS | NON FLAMMABLE METAL OXIDE |
| | : | RB | NON FLAMMABLE CEMENT |
| | : | ※ | ADJUSTMENT RESISTOR |
| COIL | : | LF-8L | MICRO INDUCTOR |
| CAPACITOR | : | TA | TANTALUM |
| | : | PS | STYROL |
| | : | PP | POLYPROPYLENE |
| | : | PT | MYLAR |
| | : | MPS | METALIZED POLYESTER |
| | : | MPP | METALIZED POLYPROPYLENE |
| | : | ALB | BIPOLAR |
| | : | ALT | HIGH TEMPERATURE |
| | : | ALR | HIGH RIPPLE |

**Note:**

**The components identified by shading and ⚠ mark are critical for safety. Replace only with the part number specified.**
**The symbol ⊣⊢ (displayed on component side of the circuit board) indicates fast operating fuse. Replace only with fuse of the same rating as marked.**

**Les composants identifiés per un tramé et une marque ⚠ sont critiques pour la sécurité. Ne les remplacer que par une piéce portant le numéro spécifié. Le symbole ⊣⊢ indique une fusible a action rapide. Doit etre remplacee par une fusible de meme yaleur, comme marque.**



## A BOARD IC BLOCK DIAGRAMS

### A BOARD: IC401 TDA7057AQ/2 (KV-32FS12/32FS16 ONLY)

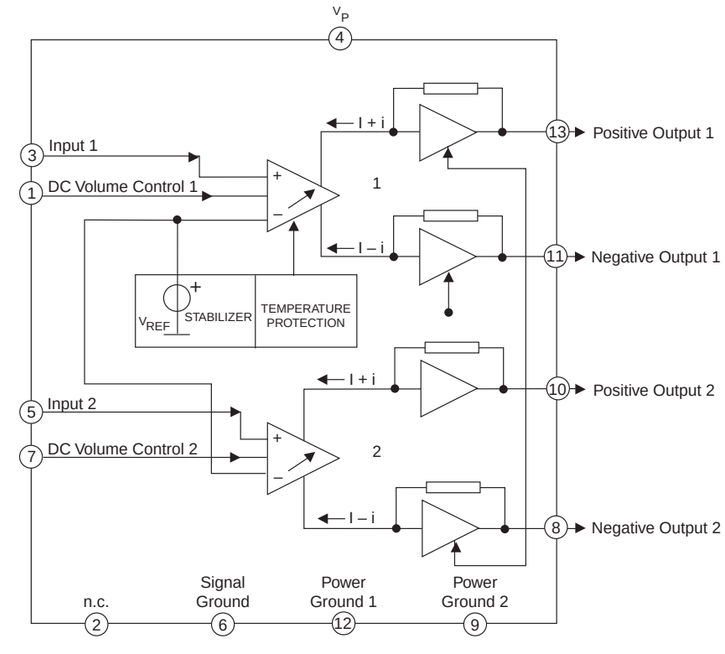


### A BOARD: IC402 TDA8580Q/N1 (ALL EXCEPT 32FS12/32FS16)

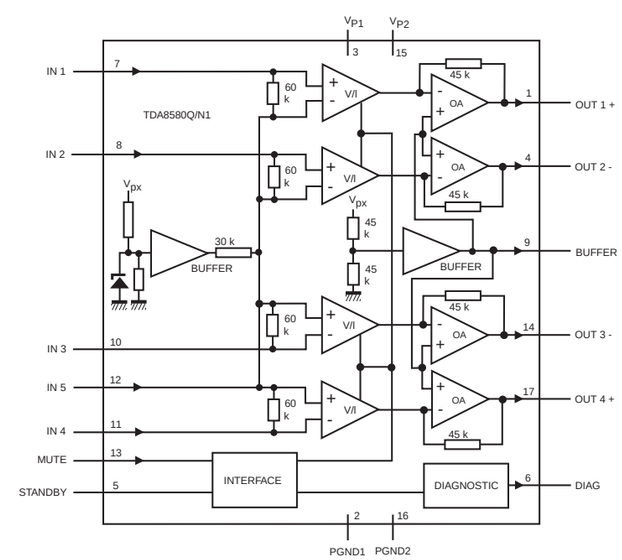


### A BOARD: IC502 TDA8172 (ALL EXCEPT 32FS12/32FS16)

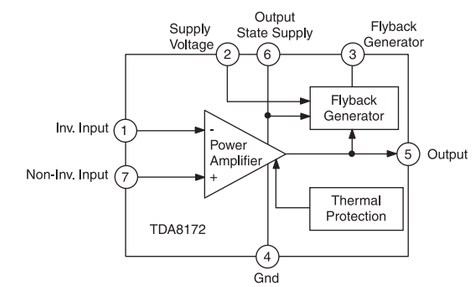


### A BOARD: IC502 STV9379 (KV-32FS12/32FS16 ONLY)

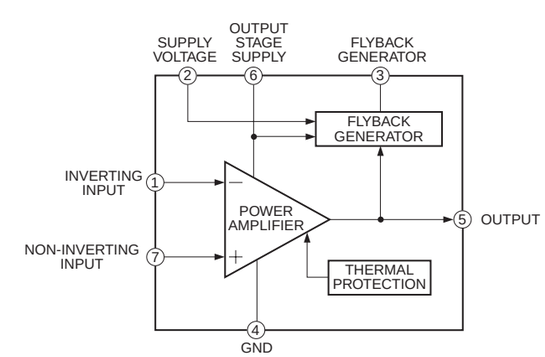

# A

[POWER SUPPLY, DEFLECTION, TUNER/IF, AUDIO, MTS]

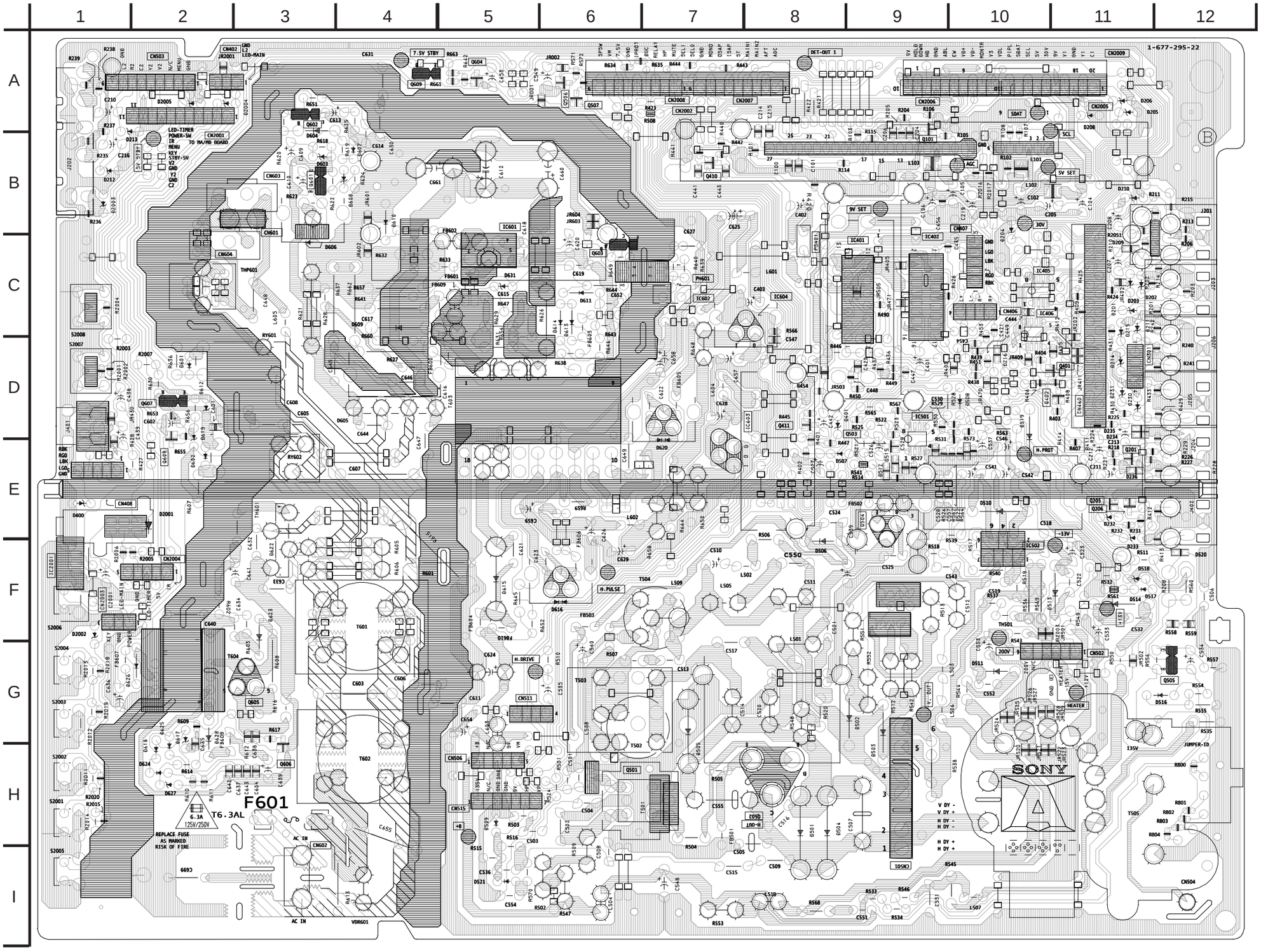


## A BOARD LOCATOR LIST

| DIODE | | D602 | E-2 | Q402 | C-11 |
|---|---|---|---|---|---|
| D201 | C-11 | D603 | B-3 | Q410 | B-7 |
| D202 | C-11 | D604 | B-3 | Q411 | D-8 |
| D203 | C-11 | D605 | D-4 | Q501 | H-7 |
| D204 | B-10 | D606 | C-3 | Q502 | H-7 |
| D205 | A-11 | D607 | B-4 | Q503 | D-9 |
| D206 | A-11 | D608 | B-3 | Q504 | E-9 |
| D208 | A-11 | D609 | C-4 | Q505 | G-12 |
| D209 | C-11 | D610 | B-4 | Q506 | A-6 |
| D210 | B-11 | D611 | C-6 | Q507 | A-6 |
| D211 | C-11 | D612 | D-2 | Q601 | B-3 |
| D212 | B-1 | D613 | C-6 | Q602 | A-3 |
| D213 | B-1 | D614 | C-6 | Q603 | C-6 |
| D214 | D-11 | D615 | F-5 | Q604 | A-5 |
| D215 | C-11 | D616 | F-6 | Q605 | G-3 |
| D216 | C-10 | D617 | H-2 | Q606 | H-3 |
| D230 | D-11 | D618 | H-2 | Q607 | D-2 |
| D231 | D-11 | D619 | D-2 | Q608 | D-2 |
| D232 | E-11 | D620 | D-7 | Q609 | A-4 |
| D233 | E-11 | D622 | F-3 | | |
| D234 | D-11 | D623 | G-2 | | |
| D235 | D-11 | D624 | G-5 | | |
| D236 | E-11 | D625 | H-2 | | |
| D401 | D-8 | D626 | G-1 | | |
| D501 | H-8 | D627 | H-2 | | |
| D502 | G-9 | D628 | H-2 | | |
| D503 | G-9 | D2001 | E-2 | | |
| D504 | H-8 | D2002 | F-1 | | |
| D505 | G-7 | D2003 | B-1 | | |
| D506 | F-8 | D2004 | A-2 | | |
| D507 | E-8 | D2005 | A2 | | |
| D508 | D-9 | IC | | | |
| D509 | H-5 | IC401 | C-9 | | |
| D510 | E-10 | IC402 | B-9 | | |
| D511 | G-10 | IC501 | D-9 | | |
| D512 | E-9 | IC502 | F-10 | | |
| D513 | F-10 | IC601 | B-5 | | |
| D514 | F-11 | IC602 | C-7 | | |
| D515 | E-9 | IC603 | D-7 | | |
| D516 | G-11 | IC604 | C-8 | | |
| D517 | F-11 | IC2001 | E-1 | | |
| D518 | F-11 | TRANSISTOR | | | |
| D519 | D-10 | Q101 | A-9 | | |
| D520 | F-12 | Q201 | D-11 | | |
| D521 | I-5 | Q205 | E-11 | | |
| D522 | E-9 | Q206 | E-11 | | |
| D601 | D-2 | Q401 | C-11 | | |

## A BOARD SCHEMATIC DIAGRAM

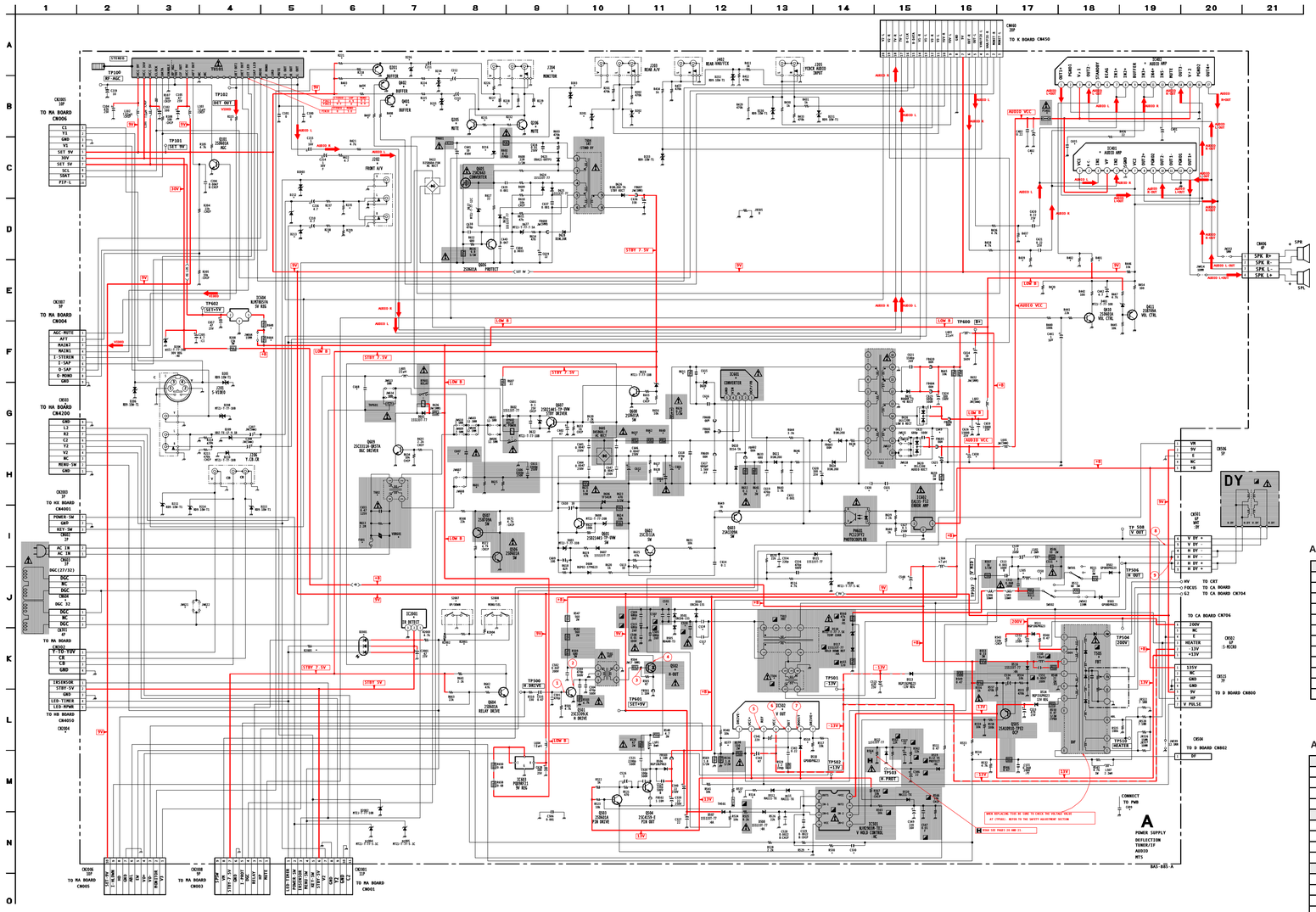

## A BOARD MARK (*) LIST

| REF NO. | LOC. | KV-27FV16 | KV-29FV16 KV-29FV16C | KV-32FS12 KV-32FS16 | REF NO. | LOC. | KV-27FV16 | KV-29FV16 KV-29FV16C | KV-32FS12 KV-32FS16 |
|---|---|---|---|---|---|---|---|---|---|
| C211 | A-7 | 470 16V | 470 | # | Q205 | B-8 | 2SD601A-QRS-TX | 2SD601A-QRS-TX | # |
| C212 | A-8 | 4.7 | 4.7 | # | Q206 | B-9 | 2SD601A-QRS-TX | 2SD601A-QRS-TX | # |
| C213 | B-8 | 4.7 | 4.7 | # | Q401 | B-7 | 2SB709A-QRS-TX | 2SB709A-QRS-TX | # |
| C401 | B-19 | 100 | 100 | # | Q402 | B-6 | 2SB709A-QRS-TX | 2SB709A-QRS-TX | # |
| C402 | B-17 | 1000 | 1000 | 2200 25V | Q502 | K-11 | 2SD2578-YB | 2SD2578-YB | 2SD2580-YB |
| C435 | C-18 | .22 25V | .22 25V | # | R218 | A-6 | 100 | 100 | # |
| C507 | K-11 | 17000PF 1.2KV | 17000PF 1.2KV | 22000PF 1.2KV | R221 | A-6 | 220 | 220 | # |
| C511 | J-17 | 1 250V | 1 250V | .82 250V | R224 | B-7 | 4.7K | 4.7K | # |
| C514 | K-11 | .68 250V | .68 250V | .82 250V | R225 | B-7 | 4.7K | 4.7K | # |
| C517 | K-11 | # | # | 0.1 | R226 | B-8 | 75 | 75 | # |
| C520 | K-11 | .047 630V | .047 630V | .051 400V | R227 | B-8 | 470K | 470K | # |
| C530 | N-14 | 0.0022 | 0.0022 | 0.001 | R228 | B-8 | 470K | 470K | # |
| C548 | J-15 | 22 160V | 22 160V | 100 160V | R229 | B-9 | 470K | 470K | # |
| C550 | J-17 | .1 250V | .1 250V | .47 250V | R231 | B-8 | 6.8K | 6.8K | # |
| C555 | K-11 | 2700PF 1.2KV | 2700PF 1.2KV | 4700PF 1.2KV | R232 | B-8 | 6.8K | 6.8K | # |
| C607 | H-7 | .47 125V | .47 300V | .47 125V | R235 | D-6 | # | # | 470K |
| C612 | H-11 | 820 250V | # | 820 250V | R237 | C-6 | # | # | 220 |
| C615 | F-12 | # | 0.022 | # | R238 | D-6 | # | # | 220 |
| C616 | F-12 | # | 220PF | # | R239 | D-6 | # | # | 470K |
| C625 | H-16 | 1000 | 1000 | 1000 | R401 | D-18 | 20K | 20K | # |
| C630 | H-14 | .0047 250V | # | .0047 250V | R402 | D-18 | 10K | 10K | # |
| C631 | H-15 | .0047 250V | # | .0047 250V | R403 | B-6 | 4.7K | 4.7K | # |
| C648 | G-6 | .22 125V | .22 300V | .22 125V | R404 | B-6 | 4.7K | 4.7K | # |
| C649 | H-15 | .0047 500V | 0.0047 | # | R407 | B-6 | 100 | 100 | # |
| C658 | H-16 | 1000 | 1000 | 1000 25V | R408 | B-6 | 100 | 100 | # |
| C660 | H-11 | # | 330 400V | # | R420 | F-17 | # | # | 3.9K |
| C661 | H-11 | # | 330 400V | # | R437 | E-17 | 10K | 10K | 4.7K |
| C699 | N-19 | .0047 250V | # | .0047 250V | R439 | E-17 | 10K | 10K | 4.7K |
| CN503 | G-1 | 9P | 9P | # | R518 | L-13 | 6.8K | 6.8K | 5.6K |
| CN604 | J-1 | # | # | 3P | R519 | L-12 | 6.8K | 6.8K | 5.6K |
| CN2001 | N-5 | 11P | 11P | 8P | R513 | J-17 | 22 3W | 22 3W | 10 3W |
| CN2004 | K-1 | 5P | 5P | # | R514 | M-12 | 22K | 22K | 8.2K |
| D201 | C-10 | RD9.1EW-T1 | RD9.1EW-T1 | # | R529 | N-14 | 330K | 330K | 270K |
| D202 | C-11 | RD9.1EW-T1 | RD9.1EW-T1 | # | R530 | N-14 | 15K | 15K | 18K |
| D203 | C-10 | RD9.1EW-T1 | RD9.1EW-T1 | # | R533 | M-16 | 33K | 33K | 22K |
| D212 | D-5 | # | # | MTZJ-T7710B | R534 | M-16 | 36K | 36K | 33K |
| D213 | D-5 | # | # | MTZJ-T7710B | R564 | M-14 | 180K | 180K | 56K |
| D216 | C-8 | 100 | 100 | # | R601 | H-8 | 4.7M 1/2W | # | 4.7M 1/2W |
| D234 | B-7 | UDZ-TE-17-9.1B | UDZ-TE-17-9.1B | # | R615 | I-8 | # | 8.2M 1W | # |
| D235 | B-7 | UDZ-TE-17-9.1B | UDZ-TE-17-9.1B | # | R627 | H-11 | 390K | 270K | 390K |
| D236 | B-7 | UDZ-TE-17-9.1B | UDZ-TE-17-9.1B | # | R628 | H-11 | # | 270K | 270K |
| D609 | G-12 | # | RU-1P | # | R631 | F-12 | # | 100K 3W | # |
| D2001 | K-6 | # | # | LNK0120022G | R637 | H-11 | # | 5.6K 3W | # |
| D2003 | C-5 | # | # | RD9.1EW-T1 | R638 | H-14 | 33 | 56 | 33 |
| F601 | I-6 | 6.3A/125V | 6.3A/250V | 6.3A/125V | R646 | H-13 | 1.5K | 1.2K | 1.5K |
| IC401 | B-18 | # | # | TDA7057AQ/N2 | R648 | E-4 | 4.7 3W | 4.7 3W | 33 3W |
| IC402 | A-17 | TDA8580QJ/N1 | TDA8580QJ/N1 | # | R660 | H-11 | 15K 3W | 5.6K | 15K 3W |
| IC502 | L-12 | TDA8172 | TDA8172 | STV9379 | R662 | H-11 | # | 5.6K 3W | # |
| IC601 | G-12 | STR-F6626 | STR-F6656 | STR-F6626 | R664 | F-4 | 4.7 3W | 4.7 3W | # |
| IC2001 | J-7 | # | # | SBX3081-71 | R2001 | K-8 | # | # | 2.2K |
| J202 | C-6 | # | # | 3P | R2002 | K-8 | # | # | 1.5K |
| J204 | A-8 | 3P | 3P | # | R2004 | J-8 | # | # | 6.8K |
| JW615 | G-15 | # | # | 5MM | R2005 | K-5 | # | # | 0 |
| JW616 | G-15 | # | # | 5MM | S2007 | J-7 | # | # | 1-762-816-11 |
| JW617 | G-15 | 5MM | 5MM | # | S2008 | J-8 | # | # | 1-762-816-11 |
| JW618 | G-15 | 5MM | 5MM | # | T504 | L-13 | 1-431-693-11 | 1-431-693-11 | 1-435-098-11 |
| JW621 | J-3 | 7.5MM | 7.5MM | # | T505 | K-18 | 8-598-834-20 | 8-598-834-20 | 8-598-824-10 |
| JW622 | J-3 | 7.5MM | 7.5MM | # | T602 | H-6 | 1-435-617-11 | 1-435-402-11 | 1-435-617-11 |
| L505 | J17 | 150UH | 150UH | 68UH | T603 | F-14 | 1-435-403-11 | 1-435-402-11 | 1-435-403-11 |
| PS401 | B-17 | 1-532-686-21 | 1-532-686-21 | 1-576-336-21 | VDR601 | I-6 | 1-803-585-11 | 1-803-967-11 | 1-803-585-11 |
| Q201 | A-6 | 2SB709A-QRS-TX | 2SB709A-QRS-TX | # | | | | | |

#: Not Mounted

## A BOARD IC VOLTAGE LIST

| IC401 | | 12 | 0.0 | 10 | 4.1 | 4 | GND | 7 | 2.1 |
|---|---|---|---|---|---|---|---|---|---|
| pin | volt | 13 | 6.9 | 11 | 4.1 | 5 | 9.5 | IC601 | |
| 1 | 0.6 | IC402 | | 12 | 4.1 | 6 | 10.1 | pin | volt |
| 2 | 0.0 | pin | volt | 13 | 5.2 | 7 | 0.1 | 1 | -31.8 |
| 3 | 2.4 | 1 | 6.8 | 14 | 6.8 | 8 | 14.0 | 2 | -32.7 |
| 4 | 14.3 | 2 | GND | 15 | 14.1 | IC502 | | 3 | 53.2 |
| 5 | 2.4 | 3 | 14.1 | 16 | GND | pin | volt | 4 | -23.8 |
| 6 | 0.0 | 4 | 6.8 | 17 | 6.8 | 1 | 2.1 | 5 | -32.7 |
| 7 | 0.6 | 5 | 4.3 | IC501 | | 2 | 14.0 | IC602 | |
| 8 | 6.9 | 6 | NC | pin | volt | 3 | -12.6 | pin | volt |
| 9 | 0.0 | 7 | 4.1 | 1 | 0.2 | 4 | -13.9 | 1 | 135.9 |
| 10 | 6.9 | 8 | 4.1 | 2 | 3.7 | 5 | 0.2 | 2 | 123.4 |
| 11 | 6.9 | 9 | 6.8 | 3 | 2.5 | 6 | 14.3 | 3 | GND |

| IC603 | | IC2001 | | 7 | 5.5 | 20 | 5.0 |
|---|---|---|---|---|---|---|---|
| pin | volt | pin | volt | 8 | 2.1 | 21 | 0.3 |
| 1 | 13.3 | 1 | 5.1 | 9 | 8.9 | 22 | 0.0 |
| 2 | 8.9 | 2 | 5 | 10 | 4.1 | 23 | 0.0 |
| 3 | GND | 3 | GND | 11 | 0.0 | 24 | 0.0 |
| 4 | 13.3 | TU101 | | 12 | N/C | 25 | 0.0 |
| IC604 | | pin | volt | 13 | N/C | 26 | 4.5 |
| pin | volt | 1 | 8.6 | 14 | N/C | 27 | 4.5 |
| 1 | 13.3 | 2 | 30.7 | 15 | N/C | All voltages are in V | |
| 2 | 5.0 | 3 | 5.1 | 16 | N/C | | |
| 3 | GND | 4 | 4.9 | 17 | 4.7 | | |
| | | 5 | 4.9 | 18 | 4.4 | | |
| | | 6 | GND | 19 | 5.0 | | |

## A BOARD TRANSISTOR VOLTAGE LIST

| Q605 | |
|---|---|
| pin | volt |
| D | -35.6 |
| G | 40.8 |
| S | 36.8 |

All voltages are in V

## A BOARD TRANSISTOR VOLTAGE LIST

| Q101 | | Q401 | | Q501 | | Q505 | | Q602 | | Q607 | |
|---|---|---|---|---|---|---|---|---|---|---|---|
| pin | volt | pin | volt | pin | volt | pin | volt | pin | volt | pin | volt |
| B | 0.0 | B | 4.5 | B | 0.0 | B | 134.9 | B | -32.8 | B | 0.7 |
| C | 5.6 | C | GND | C | 93.3 | C | 1.8 | C | -23.6 | C | 0.1 |
| E | GND | E | 0.1 | E | GND | E | 135.5 | E | -32.9 | E | GND |

| Q201 | | Q402 | | Q502 | | Q506 | | Q603 | | Q608 | |
|---|---|---|---|---|---|---|---|---|---|---|---|
| pin | volt | pin | volt | pin | volt | pin | volt | pin | volt | pin | volt |
| B | 8.6 | B | 4.5 | B | -0.1 | B | 0.0 | B | -23.6 | B | 0.0 |
| C | GND | C | GND | C | 133.0 | C | 0.0 | C | -31.2 | C | 0.7 |
| E | 9.0 | E | 0.2 | E | GND | E | GND | E | -23.6 | E | GND |

| Q205 | | Q410 | | Q503 | | Q507 | | Q604 | | Q609 | |
|---|---|---|---|---|---|---|---|---|---|---|---|
| pin | volt | pin | volt | pin | volt | pin | volt | pin | volt | pin | volt |
| B | -0.4 | B | 0.0 | B | 0.2 | B | 0.0 | B | 0.1 | B | 0.0 |
| C | 0.0 | C | 5.2 | C | 3.8 | C | 0.0 | C | 4.1 | C | 13.9 |
| E | GND | E | GND | E | GND | E | 0.0 | E | GND | E | GND |

| Q206 | | Q411 | | Q504 | | Q601 | | Q606 | |
|---|---|---|---|---|---|---|---|---|---|
| pin | volt | pin | volt | pin | volt | pin | volt | pin | volt |
| B | -0.4 | B | 5.3 | B | 0.1 | B | -33.0 | B | -36.1 |
| C | 0.0 | C | GND | C | -6.5 | C | -33.0 | C | -35.3 |
| E | GND | E | 5.2 | E | 0.0 | E | -33.1 | E | -36.3 |

All voltages are in V

## A BOARD WAVEFORMS

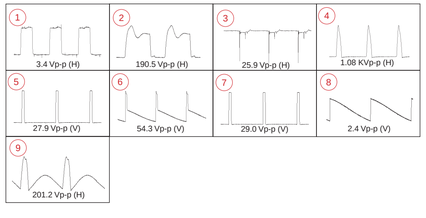

## MA BOARD SCHEMATIC DIAGRAM

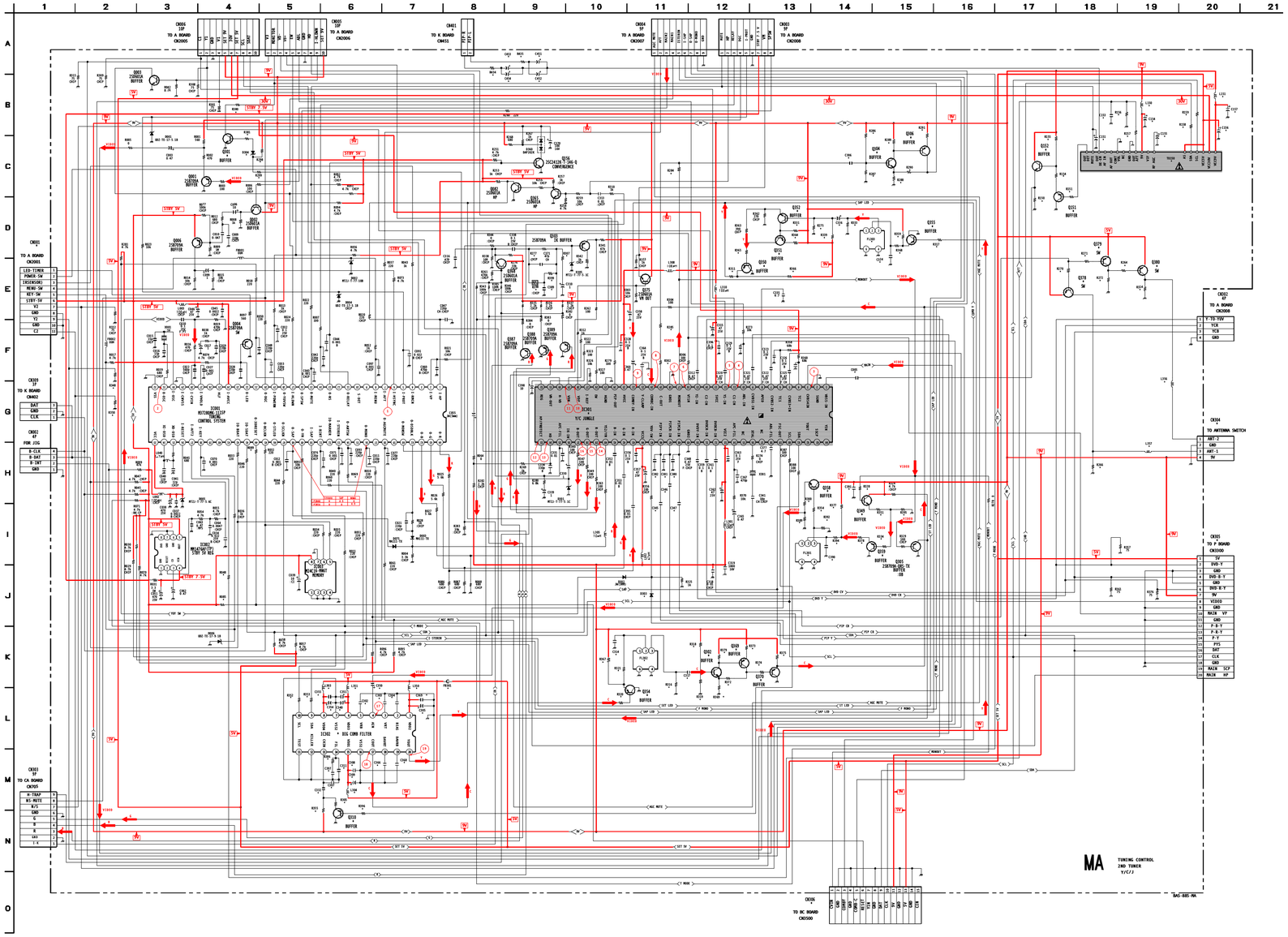


## MA BOARD MARK (*) LIST

| REF NO. | LOC. | KV-27FV16 KV-29FV16 KV-29FV16C | KV-32FS12 | KV-32FS16 | REF NO. | LOC. | KV-27FV16 KV-29FV16 KV-29FV16C | KV-32FS12 | KV-32FS16 |
|---|---|---|---|---|---|---|---|---|---|
| C005 | F-14 | 47 25V | # | 47 25V | Q379 | E-19 | 2SB709A-QRS-TX | # | 2SB709A-QRS-TX |
| C151 | C-18 | 1 | # | 1 | Q380 | E-19 | 2SB709A-QRS-TX | # | 2SB709A-QRS-TX |
| C153 | B-18 | 0.0047 | # | 0.0047 | R048 | J-3 | 100 | # | 100 |
| C154 | B-19 | 47 | # | 47 | R069 | H-6 | 220 | # | 220 |
| C155 | C-19 | 10 | # | 10 | R085 | J-3 | 4.7K | # | # |
| C156 | C-20 | 47 25V | # | 47 25V | R089 | H-4 | 220 | # | # |
| C157 | B-20 | 100 | # | 100 | R150 | D-17 | 1.5K | # | 1.5K |
| C302 | L-6 | # | 0.01 | 0.01 | R151 | D-18 | 100 | # | 100 |
| C303 | L-6 | # | 0.01 | 0.01 | R154 | D-17 | 560 | # | 560 |
| C304 | L-6 | # | 0.01 | 0.01 | R155 | C-17 | 560 | # | 560 |
| C305 | L-7 | # | 100 16V | 100 16V | R156 | B-17 | 33K | # | 33K |
| C306 | C-14 | 1 16V | # | # | R157 | C-19 | 22K | # | 22K |
| C307 | M-5 | # | 10PF | 10PF | R158 | C-20 | 100 | # | 100 |
| C308 | M-6 | # | 0.01 | 0.01 | R159 | B-20 | 100 | # | 100 |
| C309 | M-6 | # | 100 16V | 100 16V | R264 | E-19 | 22K | # | 22K |
| C311 | M-6 | # | 180PF | 180PF | R266 | H-18 | 22K | # | 22K |
| C314 | K-10 | # | 15PF | 15PF | R270 | E-18 | 22K | # | 22K |
| C317 | K-11 | # | 0.01 | 0.01 | R271 | E-18 | 22K | # | 22K |
| C324 | F-15 | # | 15PF | 15PF | R272 | E-18 | 22K | # | 22K |
| C332 | M-5 | # | 0.0012 | 0.0012 | R275 | D-14 | # | 22K | 22K |
| C336 | D-14 | # | 47 25V | 47 25V | R277 | E-9 | 2.2M | 3.3M | 3.3M |
| C340 | L-6 | # | 100 16V | 100 16V | R284 | C-11 | 1K | # | # |
| C345 | I-11 | 0.01 | # | 0.01 | R285 | F-11 | 1K | # | # |
| C346 | I-11 | 0.01 | # | 0.01 | R286 | C-14 | 47K | # | # |
| C347 | I-11 | 0.01 | # | 0.01 | R287 | C-14 | 100K | # | # |
| C350 | L-6 | # | 0.47 | 0.47 | R288 | C-15 | 470 | # | # |
| C351 | L-6 | # | 0.01 | 0.01 | R289 | C-15 | 1K | # | # |
| C354 | L-6 | # | 100 16V | 100 16V | R290 | C-15 | 560 | # | # |
| C355 | L-6 | # | 0.01 | 0.01 | R291 | C-15 | 1.5K | # | # |
| C366 | H-10 | # | 0.01 | 0.01 | R298 | C-4 | 4.7K | # | # |
| C368 | M-7 | # | 0.01 | 0.01 | R299 | C-4 | 220 | # | # |
| C369 | L-7 | # | 0.01 | 0.01 | R300 | H-13 | # | 0 | 0 |
| C380 | I-11 | # | 0.01 | # | R302 | F-11 | 5MM | # | # |
| C381 | I-11 | # | 0.01 | # | R305 | N-6 | # | 0 | 0 |
| C382 | I-11 | # | 0.01 | # | R307 | D-10 | 8.2K | # | # |
| C389 | E-9 | 0.033 | 0.047 | 0.047 | R311 | E-12 | # | 100 | 100 |
| C390 | I-14 | # | 15PF | 15PF | R314 | E-19 | 22K | # | 22K |
| C391 | H-14 | # | 100 16V | 100 16V | R316 | K-11 | # | 5.6K | 5.6K |
| C397 | M-6 | # | 0.01 | 0.01 | R317 | D-15 | # | 100 | 100 |
| C451 | A-9 | 1 16V | # | 1 16V | R318 | K-12 | # | 56K | 56K |
| C452 | A-9 | 1 16V | # | 1 16V | R319 | K-12 | # | 22K | 22K |
| C453 | A-9 | 1 16V | # | 1 16V | R320 | K-11 | # | 100 | 100 |
| C454 | A-9 | 1 16V | # | 1 16V | R321 | K-11 | # | 560 | 560 |
| CN001 | E-1 | 11P | 8P | 8P | R328 | I-14 | # | 100 | 100 |
| CN304 | G-20 | 4P | # | 4P | R331 | D-13 | # | 1K | 1K |
| CN305 | I-20 | 20P | # | 20P | R333 | D-14 | # | 5.6K | 5.6K |
| CN306 | O-14 | 15P | # | # | R334 | I-14 | # | 100 | 100 |
| CN401 | A-8 | 2P | # | 2P | R339 | D-13 | # | 56K | 56K |
| D303 | J-11 | 1SS133T-77 | # | 1SS133T-77 | R348 | F-2 | 75 | # | # |
| D304 | C-4 | MTZJ-T-77-3.3 | # | # | R350 | G-2 | 75 | # | # |
| FB301 | L-7 | # | 0UH | 0UH | R351 | I-14 | # | 470 | 470 |
| FL301 | I-13 | # | 1-239-847-11 | 1-239-847-11 | R352 | L-5 | # | 100 | 100 |
| FL302 | K-11 | # | 1-239-847-11 | 1-239-847-11 | R353 | L-5 | # | 100 | 100 |
| FL303 | D-14 | # | 1-239-847-11 | 1-239-847-11 | R354 | I-14 | # | 100 | 100 |
| IC301 | G-9 | 8-752-098-86 | 8-752-094-98 | 8-752-098-86 | R355 | N-5 | # | 1.5K | 1.5K |
| IC302 | L-5 | # | TC90A49P | TC90A49P | R359 | D-14 | # | 2.2K | 2.2K |
| L150 | B-19 | 10UH | # | 10UH | R364 | D-13 | # | 100 | 100 |
| L151 | B-20 | 100UH | # | 100UH | R365 | E-12 | # | 100 | 100 |
| L303 | L-5 | # | 10UH | 10UH | R366 | E-12 | # | 1.5K | 1.5K |
| L304 | M-6 | # | 10UH | 10UH | R367 | K-11 | # | 2.2K | 2.2K |
| L350 | L-7 | # | 10UH | 10UH | R368 | D-14 | # | 560 | 560 |
| L351 | L-6 | # | 10UH | 10UH | R369 | K-12 | # | 220 | 220 |
| L356 | G-19 | 0 | # | 0 | R372 | K-12 | # | 560 | 560 |
| L357 | H-19 | 0 | # | 0 | R373 | K-12 | # | 100 | 100 |
| Q151 | C-18 | 2SB709A-QRS-TX | # | 2SB709A-QRS-TX | R374 | K-13 | # | 100 | 100 |
| Q152 | C-17 | 2SD601A-QRS-TX | # | 2SD601A-QRS-TX | R375 | K-13 | # | 1.5K | 1.5K |
| Q301 | B-4 | 2SD601A-QRS-TX | # | # | R377 | H-13 | # | 2.2K | 2.2K |
| Q302 | K-12 | # | 2SD601A-QRS-TX | 2SD601A-QRS-TX | R378 | I-14 | # | 0 | 0 |
| Q304 | C-15 | 2SD601A-QRS-TX | # | # | R379 | K-12 | # | 1K | 1K |
| Q306 | C-15 | 2SD601A-QRS-TX | # | # | R380 | B-4 | 0 | # | # |
| Q310 | N-6 | # | 2SB709A-QRS-TX | 2SB709A-QRS-TX | R381 | C-4 | 6.8K | # | # |
| Q349 | I-14 | # | 2SD601A-QRS-TX | 2SD601A-QRS-TX | R386 | M-6 | # | 820 | 820 |
| Q350 | E-12 | # | 2SB709A-QRS-TX | 2SB709A-QRS-TX | R389 | I-13 | # | 1K | 1K |
| Q351 | D-13 | # | 2SB709A-QRS-TX | 2SB709A-QRS-TX | R392 | I-14 | # | 5.6K | 5.6K |
| Q352 | D-13 | # | 2SD601A-QRS-TX | 2SD601A-QRS-TX | R394 | I-14 | # | 560 | 560 |
| Q354 | K-11 | # | 2SB709A-QRS-TX | 2SB709A-QRS-TX | R395 | I-15 | # | 560 | 560 |
| Q355 | D-14 | # | 2SB709A-QRS-TX | 2SB709A-QRS-TX | R396 | N-6 | # | 100 | 100 |
| Q358 | H-13 | # | 2SD601A-QRS-TX | 2SD601A-QRS-TX | R398 | E-9 | 56K | 330K | 330K |
| Q359 | I-14 | # | 2SB709A-QRS-TX | 2SB709A-QRS-TX | R399 | E-9 | 330K | 39K | 39K |
| Q369 | K-12 | # | 2SB709A-QRS-TX | 2SB709A-QRS-TX | R434 | A-8 | 4.7K | # | 4.7K |
| Q370 | K-13 | # | 2SB709A-QRS-TX | 2SB709A-QRS-TX | R435 | A-9 | 4.7K | # | 4.7K |
| Q378 | E-18 | 2SB709A-QRS-TX | # | 2SB709A-QRS-TX | TU150 | C-18 | FSS BTF-FA402 | # | FSS BTF-FA402 |

# Not Mounted

## MA BOARD WAVEFORMS

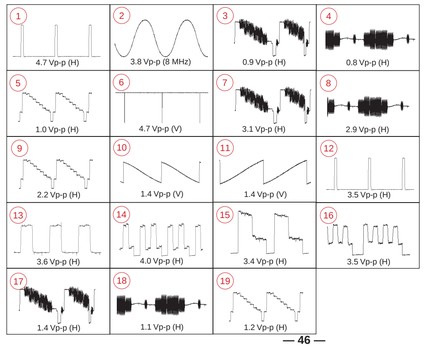

# MA

[TUNING CONTROL, 2ND TUNER, Y/C/J]

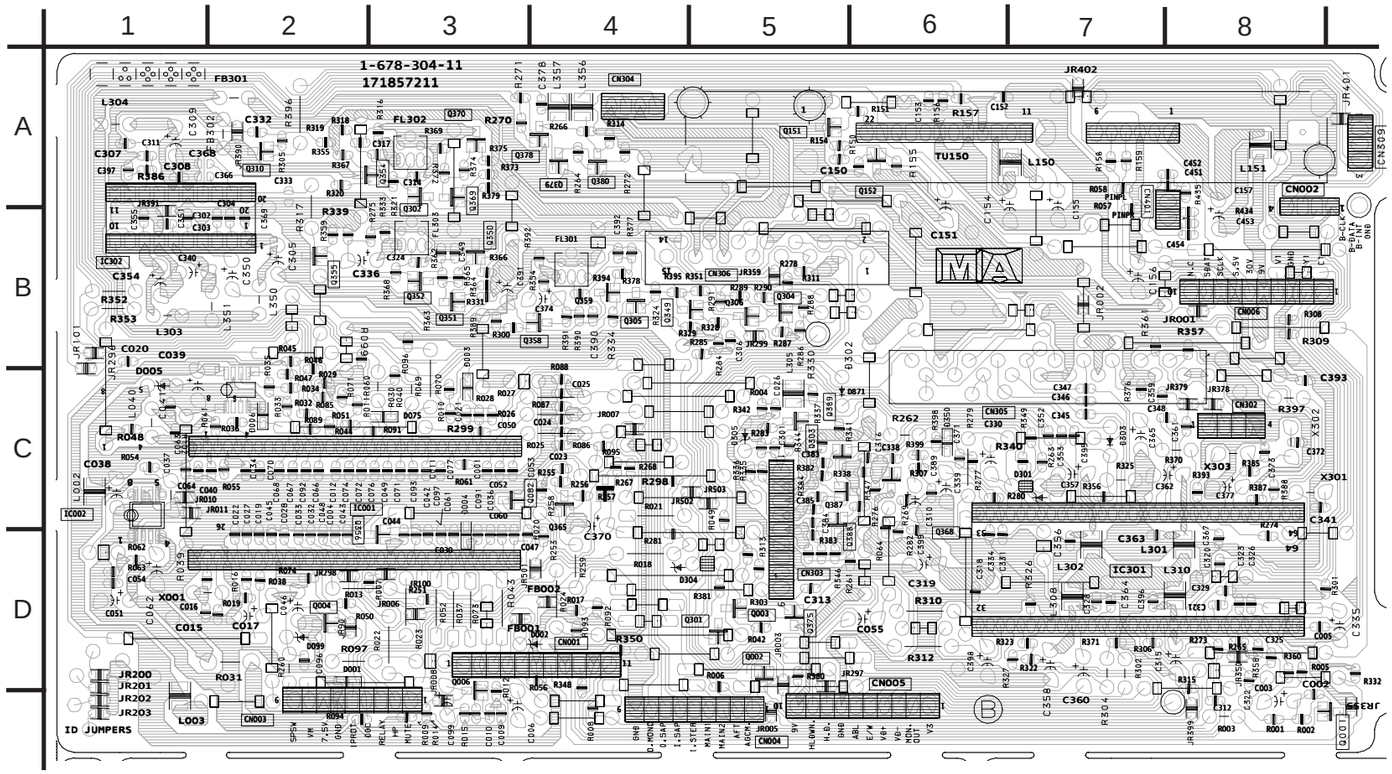


## MA BOARD IC VOLTAGE LIST

| IC001 | | 19 | 4.3 | 39 | NC | 59 | NC | 3 | GND | 13 | 8.9 | 33 | 3.6 | 53 | 9.0 | 8 | 5 | 6 | 5.1 |
|---|---|---|---|---|---|---|---|---|---|---|---|---|---|---|---|---|---|---|---|
| pin | volt | 20 | 0.1 | 40 | NC | 60 | NC | 4 | GND | 14 | NC | 34 | 2.3 | 54 | 5.3 | 9 | 4.9 | 7 | NC |
| 1 | 0.5 | 21 | NC | 41 | NC | 61 | 0.1 | 5 | 4.8 | 15 | NC | 35 | 2.3 | 55 | 1.6 | 10 | 4.9 | 8 | NC |
| 2 | 4.8 | 22 | 5.0 | 42 | 4.8 | 62 | 0.1 | 6 | 4.8 | 16 | 4.8 | 36 | 3.9 | 56 | 1.7 | 11 | 0 | 9 | NC |
| 3 | NC | 23 | NC | 43 | 4.8 | 63 | 0.1 | 7 | GND | 17 | 4.4 | 37 | 1.9 | 57 | 1.1 | 12 | 0 | 10 | NC |
| 4 | 5.0 | 24 | 5.0 | 44 | NC | 64 | 0.1 | 8 | 5.0 | 18 | GND | 38 | 1.9 | 58 | 7.2 | 13 | 2.5 | 11 | 7.5 |
| 5 | 0.0 | 25 | 2.1 | 45 | 4.8 | IC002 | | IC301 | | 19 | NC | 39 | 2.0 | 59 | 4.8 | 14 | 2.1 | 12 | NC |
| 6 | 0.0 | 26 | NC | 46 | NC | pin | volt | pin | volt | 20 | 6.4 | 40 | 0.0 | 60 | 4.8 | 15 | 5 | 13 | 9.0 |
| 7 | 2.4 | 27 | 0.3 | 47 | 4.8 | 1 | GND | 1 | 5.9 | 21 | 3.9 | 41 | 4.6 | 61 | 4.8 | 16 | 0 | 14 | 5.3 |
| 8 | 4.4 | 28 | 2.2 | 48 | 0.1 | 2 | 5.0 | 2 | GND | 22 | 5.6 | 42 | 4.6 | 62 | NC | 17 | 2.5 | 15 | GND |
| 9 | NC | 29 | GND | 49 | 0.1 | 3 | 4.9 | 3 | 5.2 | 23 | 8.9 | 43 | 4.6 | 63 | NC | 18 | 3.2 | 16 | NC |
| 10 | NC | 30 | 2.2 | 50 | 5.0 | 4 | 7.2 | 4 | 5.0 | 24 | 5.7 | 44 | 8.9 | 64 | NC | 19 | 1.9 | 17 | GND |
| 11 | 0.1 | 31 | 2.3 | 51 | 5.0 | 5 | 5.0 | 5 | 4.8 | 25 | GND | 45 | 0.2 | IC302 | | 20 | 2.4 | 18 | NC |
| 12 | NC | 32 | GND | 52 | NC | 6 | GND | 6 | 5.0 | 26 | 3.5 | 46 | 4.3 | 1 | 5 | TU150 | | 19 | NC |
| 13 | 0.5 | 33 | 5.0 | 53 | 1.0 | 7 | GND | 7 | 4.8 | 27 | 2.4 | 47 | 5.2 | 2 | 1.4 | pin | volt | 20 | 2.0 |
| 14 | NC | 34 | 2.5 | 54 | 0.1 | 8 | NC | 8 | 3.4 | 28 | 3.5 | 48 | 5.2 | 3 | 3.2 | 1 | 9.0 | 21 | 0.3 |
| 15 | 0.1 | 35 | 2.5 | 55 | NC | IC003 | | 9 | 4.8 | 29 | 3.5 | 49 | GND | 4 | 2.4 | 2 | 3.0 | 22 | 4.0 |
| 16 | 0.1 | 36 | 5.0 | 56 | 1.0 | pin | volt | 10 | 1.7 | 30 | 5.9 | 50 | 4.8 | 5 | 1.9 | 3 | 5.0 | | |
| 17 | 0.0 | 37 | 3.1 | 57 | NC | 1 | GND | 11 | 0.0 | 31 | 5.5 | 51 | 5.2 | 6 | 5 | 4 | 4.8 | | |
| 18 | 0.1 | 38 | 5.0 | 58 | 0.1 | 2 | GND | 12 | 4.8 | 32 | 7.6 | 52 | 5.2 | 7 | 0 | 5 | 4.8 | | |

All voltages are in V

## MA BOARD LOCATOR LIST

| DIODE | | D006 | C-2 | D305 | B-5 | IC301 | D-7 | Q004 | D-2 | Q302 | A-3 | Q349 | C-4 | Q356 | D-3 | Q370 | A-3 | Q388 | B-5 |
|---|---|---|---|---|---|---|---|---|---|---|---|---|---|---|---|---|---|---|---|
| D001 | D-2 | D075 | C-3 | D360 | B-4 | IC302 | B-1 | Q006 | D-3 | Q303 | C-5 | Q350 | B-3 | Q358 | B-4 | Q375 | B-5 | Q389 | C-5 |
| D002 | D-4 | D301 | C-7 | IC | | TRANSISTOR | | Q082 | B-3 | Q304 | B-5 | Q351 | B-3 | Q359 | B-4 | Q378 | A-3 | CRYSTAL | |
| D003 | C-3 | D302 | C-5 | IC001 | C-2 | Q001 | D-8 | Q151 | A-5 | Q305 | B-4 | Q352 | B-3 | Q365 | C-4 | Q379 | A-4 | X001 | D-1 |
| D004 | D-3 | D303 | C-7 | IC002 | C-1 | Q002 | D-5 | Q152 | A-6 | Q306 | B-5 | Q354 | A-3 | Q368 | C-6 | Q380 | A-4 | X301 | C-8 |
| D005 | C-1 | D304 | D-4 | IC003 | C-2 | Q003 | D-5 | Q301 | D-4 | Q310 | B-3 | Q355 | B-2 | Q369 | B-3 | Q387 | C-5 | | |



## MA BOARD TRANSISTOR VOLTAGE LIST

| Q001 | | Q151 | | Q305 | | Q352 | | Q365 | | Q379 | |
|---|---|---|---|---|---|---|---|---|---|---|---|
| pin | volt | pin | volt | pin | volt | pin | volt | pin | volt | pin | volt |
| B | 5.0 | B | 4.0 | B | 4.4 | B | 2.5 | B | 0.5 | B | 4.4 |
| C | GND | C | GND | C | GND | C | 7.8 | C | 3.8 | C | 5.1 |
| E | 5.6 | E | 4.6 | E | 5.0 | E | 1.9 | E | 0.0 | E | 5.1 |
| **Q002** | | **Q152** | | **Q306** | | **Q354** | | **Q368** | | **Q380** | |
| pin | volt | pin | volt | pin | volt | pin | volt | pin | volt | pin | volt |
| B | 4.4 | B | 6.8 | B | 9.0 | B | 2.5 | B | 2.4 | B | 5.1 |
| C | 9.0 | C | 9.0 | C | 8.8 | C | GND | C | 9.0 | C | 0.0 |
| E | 3.8 | E | 6.2 | E | 9.0 | E | 3.2 | E | 2.4 | E | 5.1 |
| **Q003** | | **Q301** | | **Q310** | | **Q355** | | **Q369** | | **Q387** | |
| pin | volt | pin | volt | pin | volt | pin | volt | pin | volt | pin | volt |
| B | 0.6 | B | 0.7 | B | 4.8 | B | 0.0 | B | 7.6 | B | 1.9 |
| C | 0.0 | C | 0.0 | C | GND | C | GND | C | 5.8 | C | GND |
| E | GND | E | GND | E | 5.4 | E | 3.0 | E | 8.3 | E | 2.5 |
| **Q004** | | **Q302** | | **Q349** | | **Q356** | | **Q370** | | **Q388** | |
| pin | volt | pin | volt | pin | volt | pin | volt | pin | volt | pin | volt |
| B | 4.9 | B | 2.5 | B | 4.4 | B | 0.5 | B | 5.8 | B | 1.9 |
| C | GND | C | 7.6 | C | 9.0 | C | 1.3 | C | GND | C | GND |
| E | 3.9 | E | 1.9 | E | 3.8 | E | GND | E | 6.4 | E | 2.5 |
| **Q006** | | **Q303** | | **Q350** | | **Q358** | | **Q375** | | **Q389** | |
| pin | volt | pin | volt | pin | volt | pin | volt | pin | volt | pin | volt |
| B | 5.2 | B | 3.6 | B | 4.0 | B | 2.4 | B | 5.0 | B | 2.0 |
| C | 0.7 | C | 0.1 | C | GND | C | 8.9 | C | 9.0 | C | GND |
| E | 5.0 | E | 3.5 | E | 4.7 | E | 1.8 | E | 4.4 | E | 2.6 |
| **Q082** | | **Q304** | | **Q351** | | **Q359** | | **Q378** | | | |
| pin | volt | pin | volt | pin | volt | pin | volt | pin | volt | | |
| B | 0.6 | B | 8.9 | B | 7.8 | B | 2.1 | B | 4.3 | | |
| C | 0.5 | C | 9.0 | C | 4.0 | C | GND | C | 4.9 | | |
| E | GND | E | 8.8 | E | 8.4 | E | 2.7 | E | 5.1 | | |

All voltages are in V

## MA BOARD IC BLOCK DIAGRAMS

### MA BOARD: IC301 CXA2154S

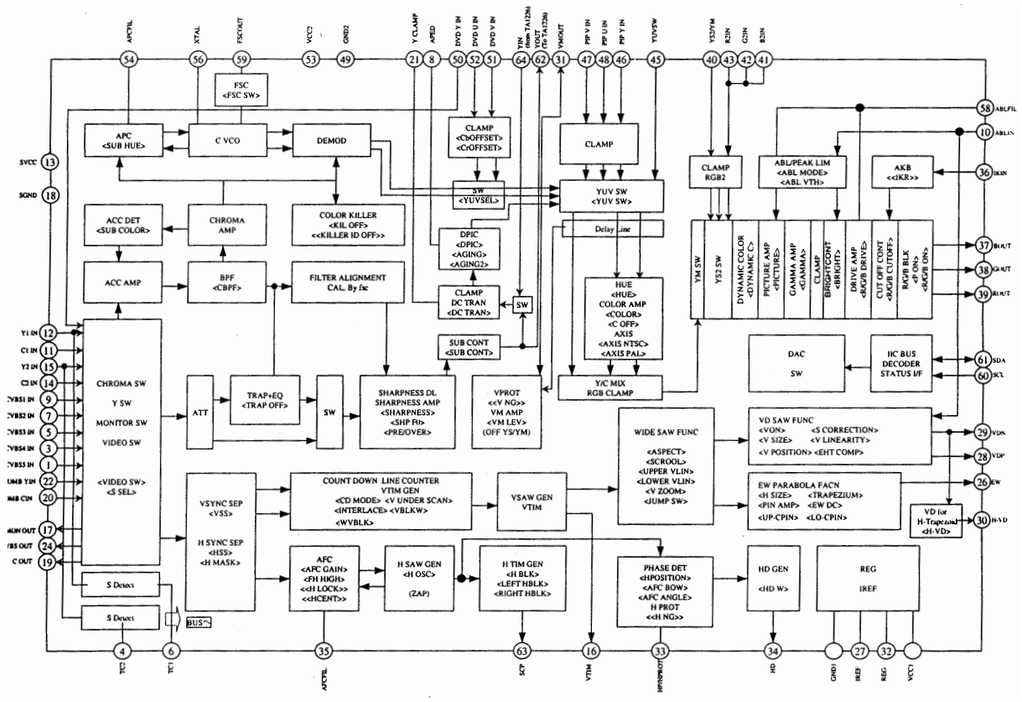

## CA BOARD SCHEMATIC DIAGRAM

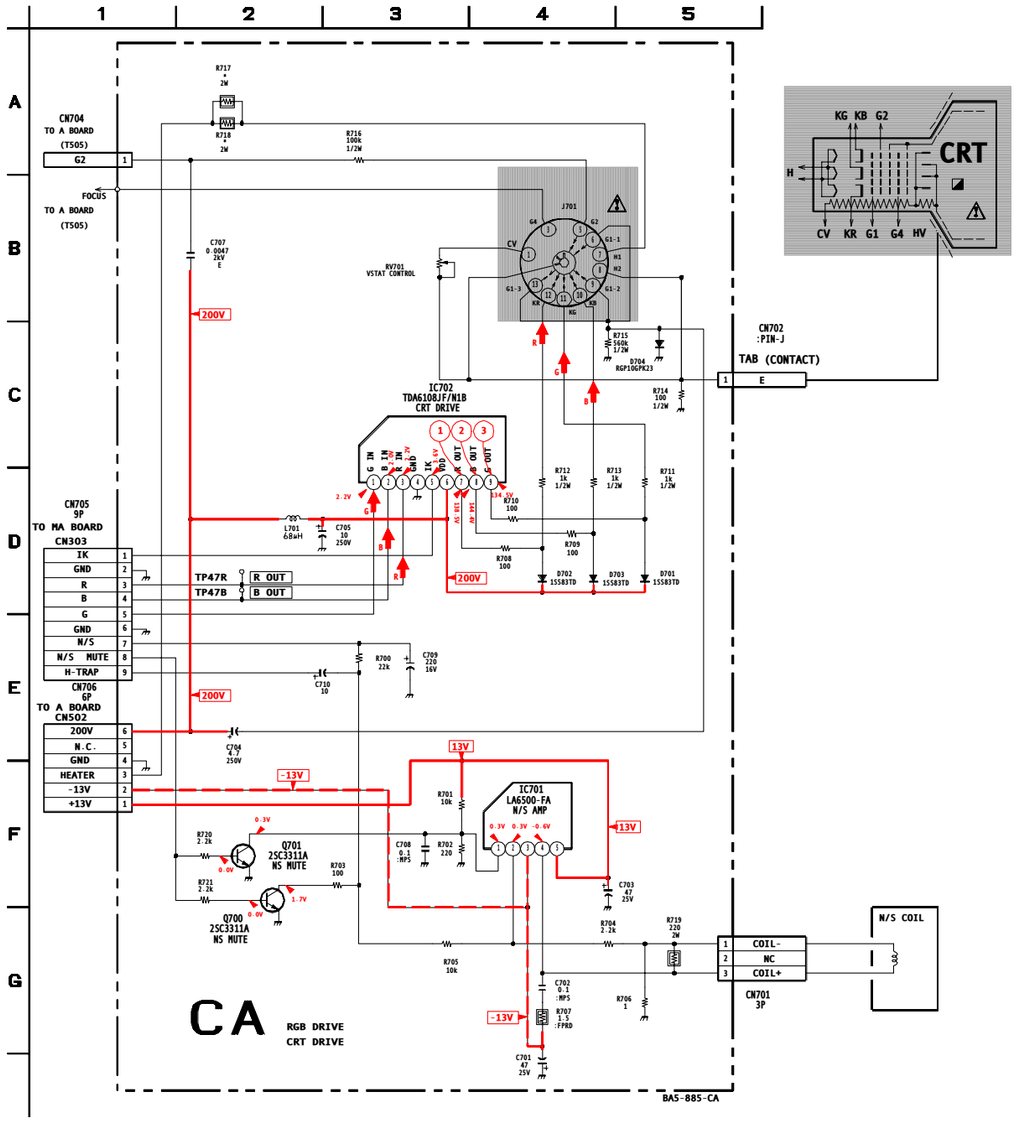


## CA [RGB DRIVE, CRT DRIVE]

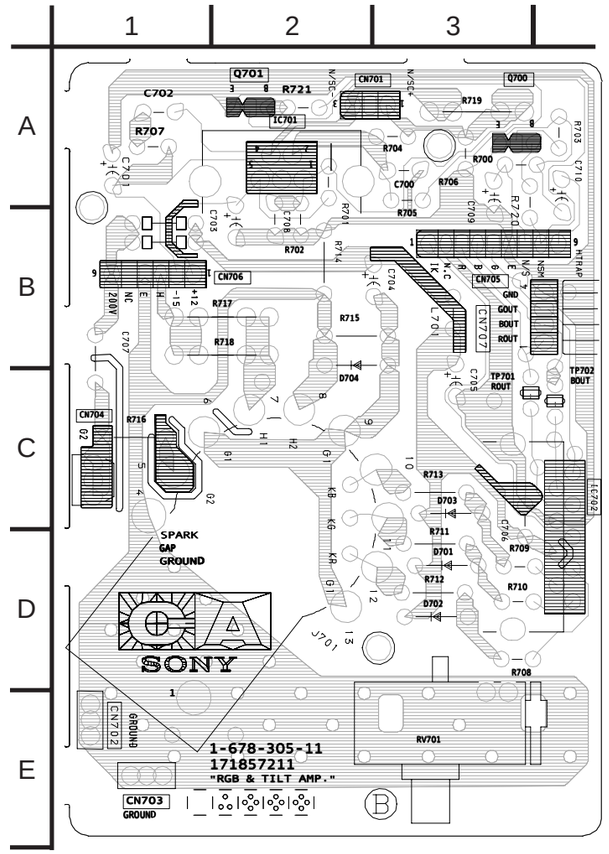


## CA BOARD WAVEFORMS

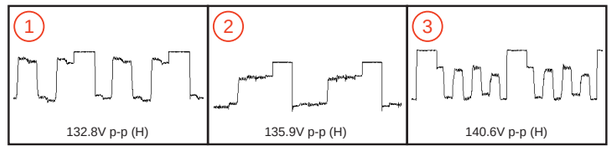


## CA BOARD MARK (*) LIST

| REF NO. | LOC. | KV-27FV16<br>KV-29FV16<br>KV-29FV16C | KV-32FS12<br>KV-32FS16 |
|---|---|---|---|
| R717 | A-2 | 2.2 2W | # |
| R718 | A-2 | # | 3.3 2W |

#: Not Mounted

## HX BOARD SCHEMATIC DIAGRAM

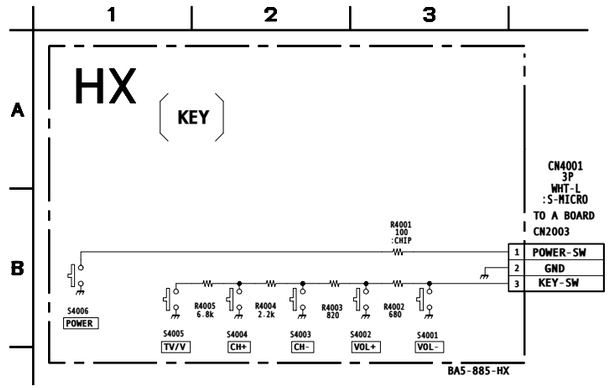


## HX [KEY]

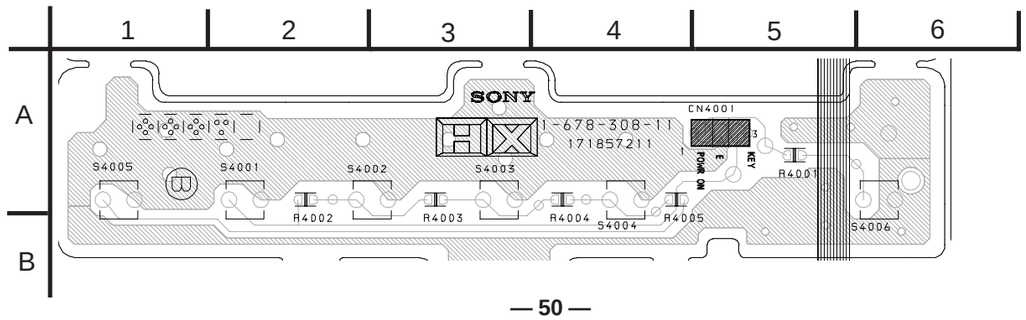

## D BOARD SCHEMATIC DIAGRAM

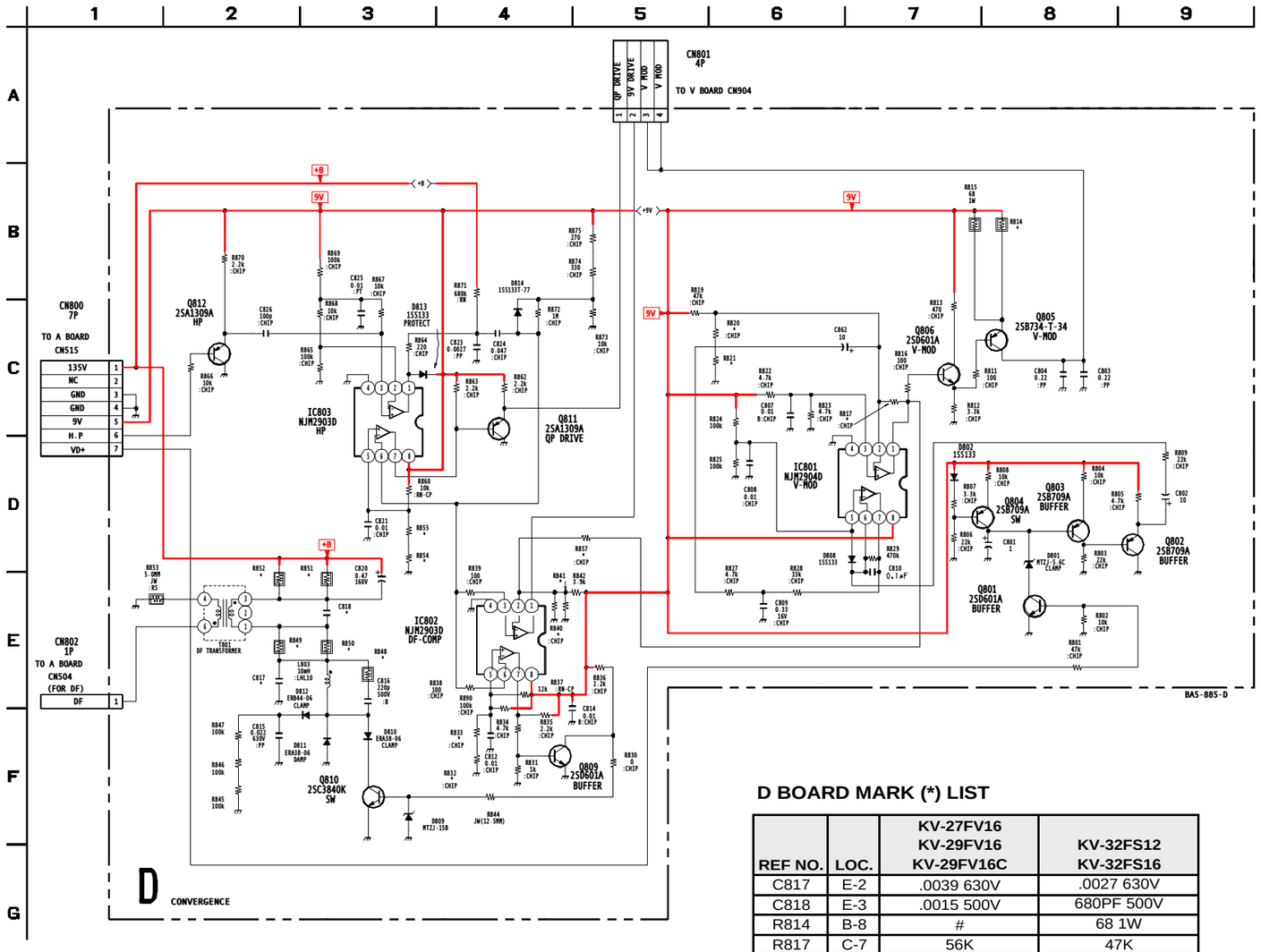


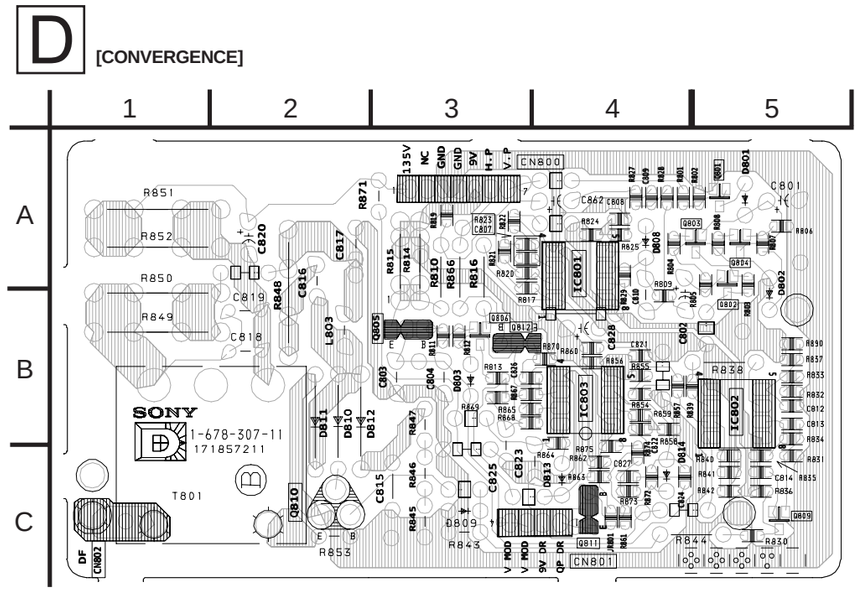


## D BOARD TRANSISTOR VOLTAGE LIST

| Q801 | | Q806 | |
|---|---|---|---|
| pin | volt | pin | volt |
| B | -2.2 | B | 7.3 |
| C | 3.4 | C | 8.1 |
| E | GND | E | 6.7 |
| **Q802** | | **Q809** | |
| pin | volt | pin | volt |
| B | 4.3 | B | 0.3 |
| C | GND | C | 0.3 |
| E | 4.9 | E | GND |
| **Q803** | | **Q810** | |
| pin | volt | pin | volt |
| B | 6.4 | B | 0.3 |
| C | 4.3 | C | 1.2 |
| E | 7.0 | E | GND |
| **Q804** | | **Q811** | |
| pin | volt | pin | volt |
| B | 7.4 | B | 6.3 |
| C | 6.4 | C | GND |
| E | 7.9 | E | 6.4 |
| **Q805** | | **Q812** | |
| pin | volt | pin | volt |
| B | 6.7 | B | 0.0 |
| C | 0.6 | C | GND |
| E | 7.3 | E | 0.6 |

All voltages are in V

## D BOARD IC VOLTAGE LIST

| IC801 | | IC803 | |
|---|---|---|---|
| pin | volt | pin | volt |
| 1 | 7.3 | 1 | 2.3 |
| 2 | 4.4 | 2 | 4.3 |
| 3 | 4.5 | 3 | 4.7 |
| 4 | GND | 4 | GND |
| 5 | 4.5 | 5 | 7.6 |
| 6 | 4.5 | 6 | 6.7 |
| 7 | 4.5 | 7 | 6.0 |
| 8 | 9.0 | 8 | 9.0 |

| IC802 | |
|---|---|
| pin | volt |
| 1 | 6.8 |
| 2 | 5.7 |
| 3 | 0.0 |
| 4 | GND |
| 5 | 6.8 |
| 6 | 6.7 |
| 7 | 3.2 |
| 8 | 9.0 |

All voltages are in V

## D BOARD MARK (*) LIST

| REF NO. | LOC. | KV-27FV16<br>KV-29FV16<br>KV-29FV16C | KV-32FS12<br>KV-32FS16 |
|---|---|---|---|
| C817 | E-2 | .0039 630V | .0027 630V |
| C818 | E-3 | .0015 500V | 680PF 500V |
| R814 | B-8 | # | 68 1W |
| R817 | C-7 | 56K | 47K |
| R820 | C-6 | 22K | 33K |
| R821 | C-5 | 15K | 3.3K |
| R832 | F-4 | 5.6K | 3.3K |
| R833 | F-4 | 33K | 39K |
| R840 | E-4 | 68K | # |
| R841 | E-4 | 6.8K | 10K |
| R848 | E-3 | 15K 1W | 2.2K 2W |
| R849 | E-3 | 3.3K 3W | 8.2K 3W |
| R850 | E-3 | # | 8.2K 3W |
| R851 | E-3 | 2.2K 2W | 6.8K 3W |
| R852 | E-2 | # | 6.8K 3W |
| R854 | D-3 | 6.8K | 5.6K |
| R855 | D-3 | 47K | 56K |
| R857 | D-4 | # | 33K |

#: Not Mounted

## BC BOARD SCHEMATIC DIAGRAM

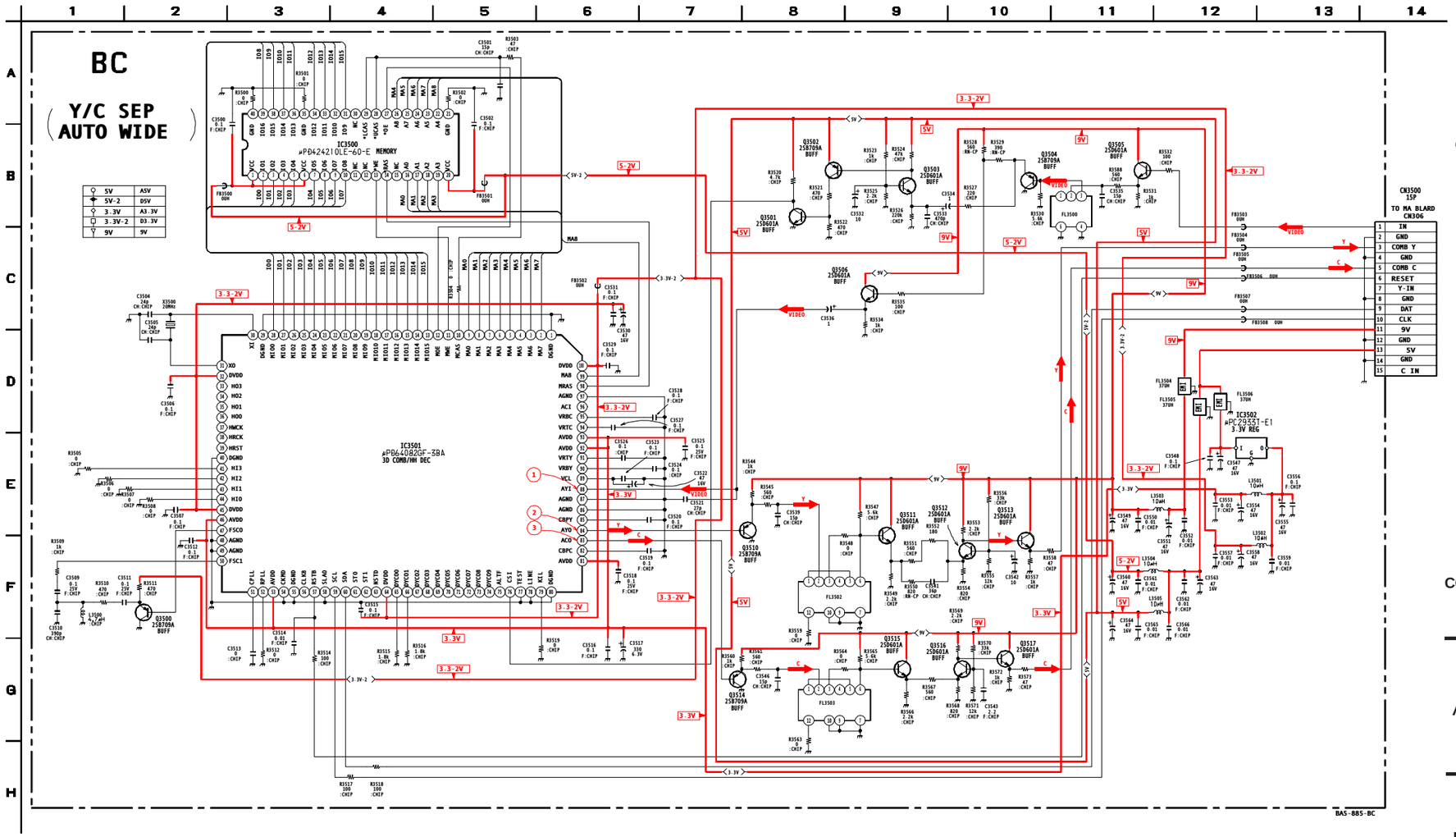


## BC [Y/C SEP, AUTO WIDE]

COMPONENT SIDE

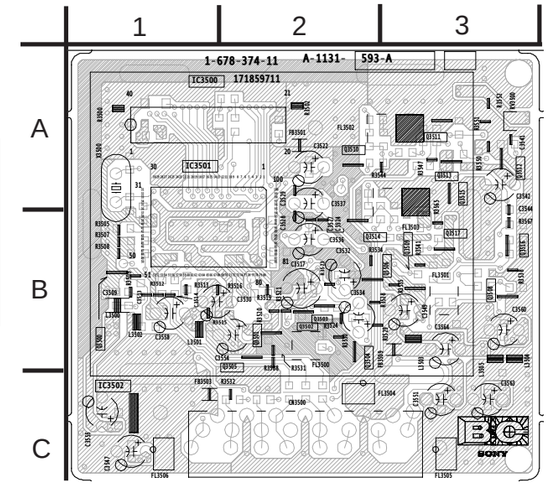


CONDUCTOR SIDE

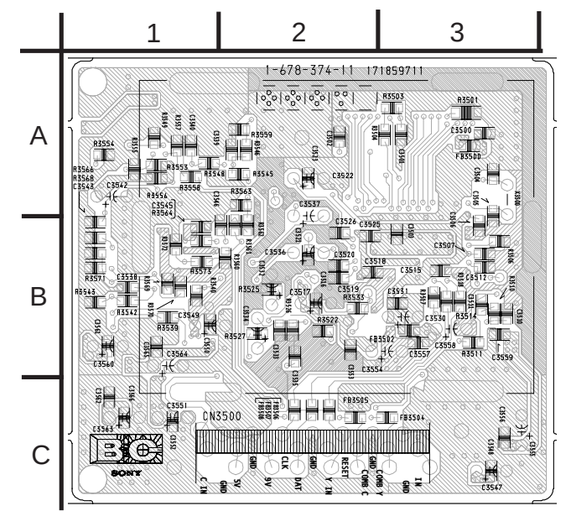


## BC BOARD IC VOLTAGE LIST

| IC3500 | | | | | | | | | | | | | | | | | |
|---|---|---|---|---|---|---|---|---|---|---|---|---|---|---|---|---|---|
| | | 16 | 1.5 | 33 | 1.1 | 8 | 1.5 | 25 | 0.9 | 42 | 0.0 | 59 | 4.8 | 76 | 3.3 | 93 | 3.3 |
| pin | volt | 17 | 1.5 | 34 | 1.1 | 9 | 1.5 | 26 | 0.9 | 43 | 0.0 | 60 | 4.8 | 77 | GND | 94 | 3.3 |
| 1 | 5.0 | 18 | 1.5 | 35 | GND | 10 | 1.0 | 27 | 0.9 | 44 | 0.0 | 61 | NC | 78 | GND | 95 | 2.0 |
| 2 | 0.8 | 19 | 1.5 | 36 | 1.1 | 11 | 2.9 | 28 | 0.8 | 45 | 3.3 | 62 | NC | 79 | 0.0 | 96 | NC |
| 3 | 0.9 | 20 | 5.0 | 37 | 1.1 | 12 | 2.4 | 29 | GND | 46 | 3.3 | 63 | NC | 80 | GND | 97 | 0.0 |
| 4 | 0.9 | 21 | GND | 38 | 1.0 | 13 | 0.3 | 30 | 1.5 | 47 | 1.8 | 64 | 3.3 | 81 | 3.3 | 98 | 0.5 |
| 5 | 0.9 | 22 | 1.6 | 39 | 0.1 | 14 | 1.1 | 31 | 1.6 | 48 | GND | 65 | 0.7 | 82 | 1.1 | 99 | 1.6 |
| 6 | 5.0 | 23 | 1.5 | 40 | GND | 15 | 1.1 | 32 | 3.3 | 49 | GND | 66 | 1.5 | 83 | 1.7 | 100 | 3.3 |
| 7 | 0.8 | 24 | 1.5 | IC3501 | | 16 | 1.1 | 33 | NC | 50 | 1.5 | 67 | NC | 84 | 1.4 | IC3501 | |
| 8 | 0.7 | 25 | 1.5 | pin | volt | 17 | 1.1 | 34 | NC | 51 | 0.0 | 68 | NC | 85 | 1.1 | pin | volt |
| 9 | 1.4 | 26 | 1.5 | 1 | GND | 18 | 1.1 | 35 | NC | 52 | 0.0 | 69 | NC | 86 | 0.0 | G | GND |
| 10 | 1.1 | 27 | 2.4 | 2 | 1.5 | 19 | 1.0 | 36 | NC | 53 | 3.3 | 70 | NC | 87 | 0.0 | I | 5.0 |
| 11 | NC | 28 | 1.1 | 3 | 1.5 | 20 | 0.1 | 37 | NC | 54 | GND | 71 | NC | 88 | 0.9 | O | 3.3 |
| 12 | NC | 29 | 1.1 | 4 | 1.5 | 21 | 1.1 | 38 | NC | 55 | GND | 72 | NC | 89 | 0.9 | | |
| 13 | 2.9 | 30 | 0.0 | 5 | 1.5 | 22 | 1.4 | 39 | NC | 56 | NC | 73 | NC | 90 | 1.0 | | |
| 14 | 0.5 | 31 | 0.3 | 6 | 1.5 | 23 | 0.7 | 40 | GND | 57 | 3.3 | 74 | NC | 91 | 1.6 | | |
| 15 | NC | 32 | 1.1 | 7 | 1.5 | 24 | 0.8 | 41 | 0.0 | 58 | GND | 75 | NC | 92 | 3.3 | | |

All voltages are in V

## BC BOARD TRANSISTOR VOLTAGE LIST

| Q3500 | | Q3504 | | Q3511 | | Q3515 | |
|---|---|---|---|---|---|---|---|
| pin | volt | pin | volt | pin | volt | pin | volt |
| B | 1.8 | B | 3.9 | B | 3.0 | B | 3.0 |
| C | 0.0 | C | GND | C | 8.9 | C | 8.9 |
| E | 2.4 | E | 4.5 | E | 2.4 | E | 2.3 |
| **Q3501** | | **Q3505** | | **Q3512** | | **Q3516** | |
| pin | volt | pin | volt | pin | volt | pin | volt |
| B | 0.2 | B | 5.0 | B | 2.3 | B | 2.4 |
| C | 3.3 | C | 8.9 | C | 5.5 | C | 6.5 |
| E | GND | E | 4.3 | E | 1.7 | E | 1.7 |
| **Q3502** | | **Q3506** | | **Q3513** | | **Q3517** | |
| pin | volt | pin | volt | pin | volt | pin | volt |
| B | 4.7 | B | 6.3 | B | 5.5 | B | 6.5 |
| C | 0.8 | C | 8.9 | C | 8.9 | C | 8.9 |
| E | 5.0 | E | 5.7 | E | 4.9 | E | 5.8 |
| **Q3503** | | **Q3510** | | **Q3514** | | | |
| pin | volt | pin | volt | pin | volt | | |
| B | 3.5 | B | 1.4 | B | 1.7 | | |
| C | 4.7 | C | GND | C | 0.0 | | |
| E | 3.7 | E | 2.1 | E | 2.4 | | |

All voltages are in V

## BC BOARD WAVEFORMS

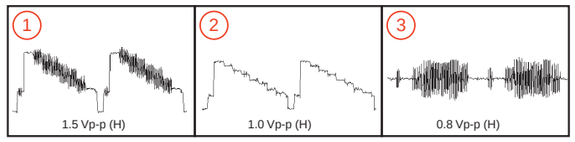


← D Board BC Board →

## HA [FRONT A/V, MENU KEY]

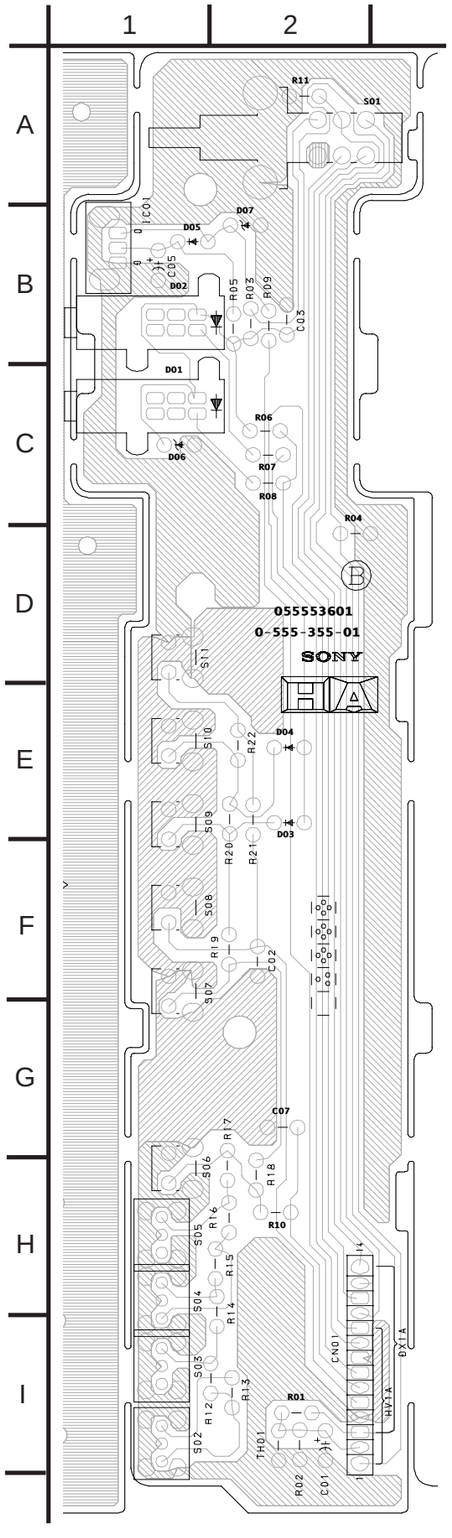


## HA BOARD SCHEMATIC DIAGRAM

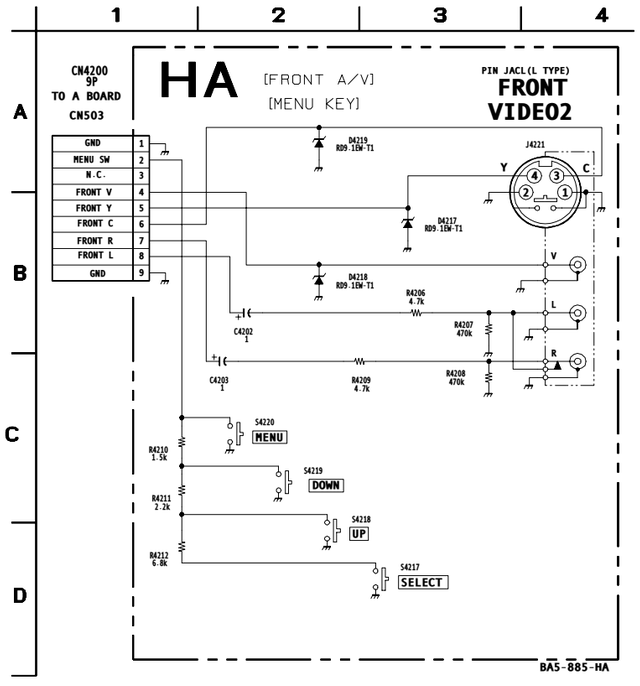


## HB BOARD SCHEMATIC DIAGRAM

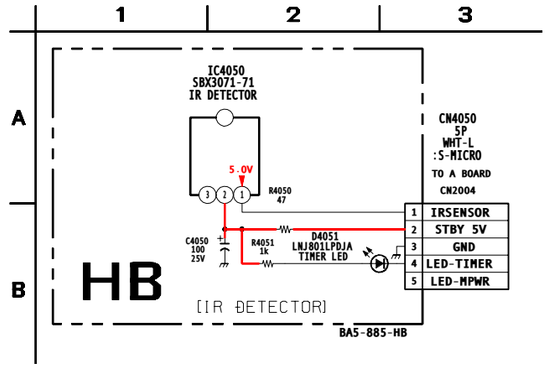


## HB [IR DETECTOR]

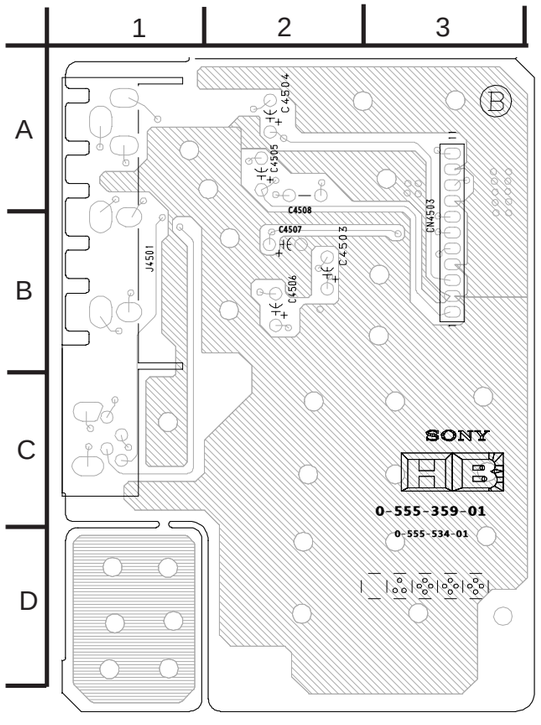

## K BOARD SCHEMATIC DIAGRAM

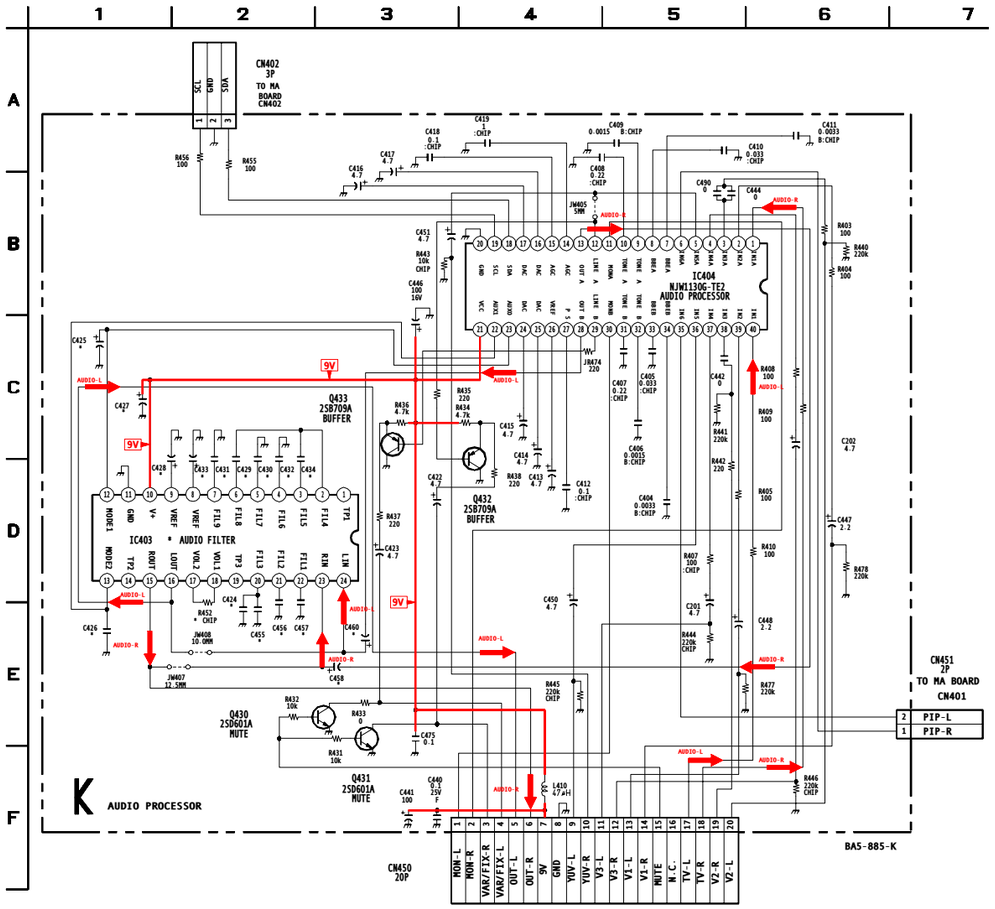


## K [AUDIO PROCESSOR]

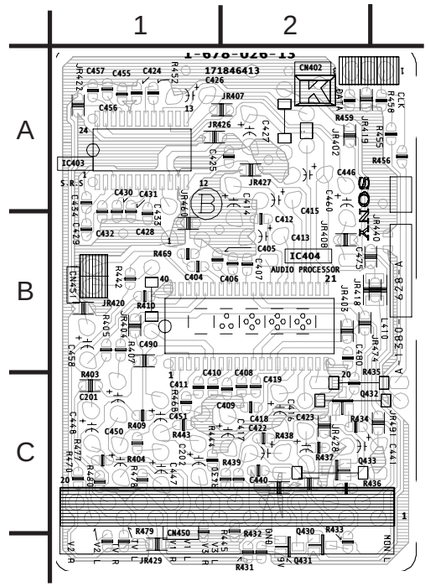


## VA [VELOCITY MODULATOR]

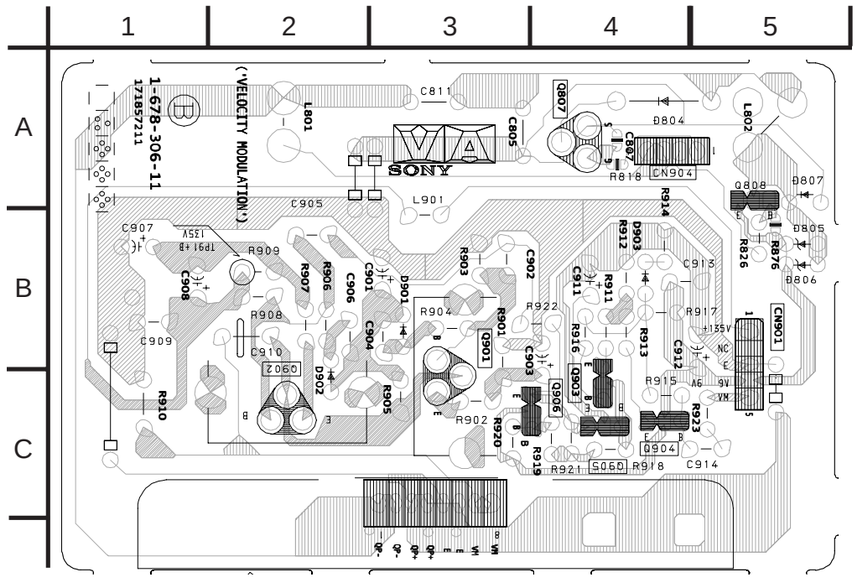


## K BOARD TRANSISTOR VOLTAGE LIST

| Q430 | | Q431 | | Q432 | | Q433 | |
|---|---|---|---|---|---|---|---|
| pin | volt | pin | volt | pin | volt | pin | volt |
| B | 0.3 | B | 0.3 | B | 4.5 | B | 4.5 |
| C | 0.0 | C | 0.0 | C | GND | C | GND |
| E | GND | E | GND | E | 5.1 | E | 5.2 |

All voltages are in V

## VA BOARD MARK(*) LIST

| REF NO. | LOC. | KV-27FV16<br>KV-29FV16<br>KV-29FV16C | KV-32FS12<br>KV-32FS16 |
|---|---|---|---|
| C805 | B-6 | .033UF 200V | .01UF 630V |
| C811 | A-6 | .047UF 200V | .082UF 200V |

#: Not Mounted

## K BOARD IC VOLTAGE LIST

| IC403 | | 16 | 4.5 | 7 | 4.7 | 24 | 1.3 |
|---|---|---|---|---|---|---|---|
| pin | volt | 17 | 4.5 | 8 | 4.5 | 25 | 1.3 |
| 1 | NC | 18 | 4.5 | 9 | 4.5 | 26 | 4.4 |
| 2 | 4.5 | 19 | NC | 10 | 4.5 | 27 | 3.9 |
| 3 | 4.5 | 20 | 4.5 | 11 | NC | 28 | 4.5 |
| 4 | 4.5 | 21 | 4.5 | 12 | 4.5 | 29 | 4.5 |
| 5 | 4.5 | 22 | 4.5 | 13 | 4.5 | 30 | NC |
| 6 | 4.5 | 23 | 4.5 | 14 | 1.0 | 31 | 4.5 |
| 7 | 4.5 | 24 | 4.5 | 15 | 4.5 | 32 | 4.5 |
| 8 | 4.5 | IC404 | | 16 | 0.9 | 33 | 4.5 |
| 9 | 4.5 | pin | volt | 17 | 0.9 | 34 | 4.5 |
| 10 | 9.0 | 1 | 4.5 | 18 | 4.8 | 35 | NC |
| 11 | GND | 2 | 4.5 | 19 | 4.9 | 36 | 4.5 |
| 12 | 0 | 3 | 4.5 | 20 | GND | 37 | 4.5 |
| 13 | 0 | 4 | 4.5 | 21 | 8.9 | 38 | 4.5 |
| 14 | NC | 5 | 4.5 | 22 | NC | 39 | 4.5 |
| 15 | 4.5 | 6 | NC | 23 | NC | 40 | 4.5 |

All voltages are in V

## K BOARD MARK (*) LIST

| REF NO. | LOC. | KV-27FV16<br>KV-29FV16<br>KV-29FV16C | KV-32FS12<br>KV-32FS16 |
|---|---|---|---|
| C424 | E-2 | .47 25V | # |
| C425 | C-1 | 1 16V | # |
| C426 | E-2 | 1 | # |
| C427 | C-1 | 100 | # |
| C428 | D-2 | 100 | # |
| C429 | D-2 | 0.0047 | # |
| C430 | D-2 | .22 25V | # |
| C431 | D-2 | .1 25V | # |
| C432 | D-2 | 0.01 | # |
| C433 | D-2 | 1 16V | # |
| C434 | D-2 | .1 25V | # |
| C455 | E-2 | .4725V | # |
| C456 | E-2 | 0.01 | # |
| C457 | E-2 | 0.033 | # |
| C458 | E-3 | 4.7 | # |
| C460 | E-3 | 4.7 | # |
| IC403 | D-1 | NJM2198-TE2 | # |
| R452 | E-2 | 10K | # |

#: Not Mounted

## VA BOARD SCHEMATIC DIAGRAM

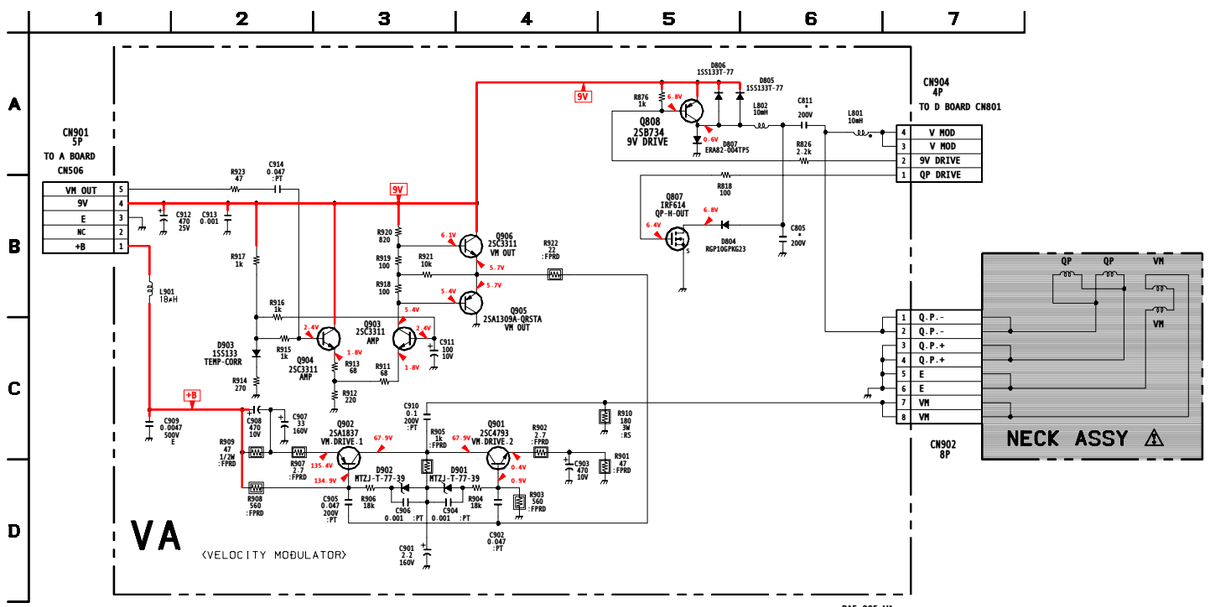

## P BOARD SCHEMATIC DIAGRAM

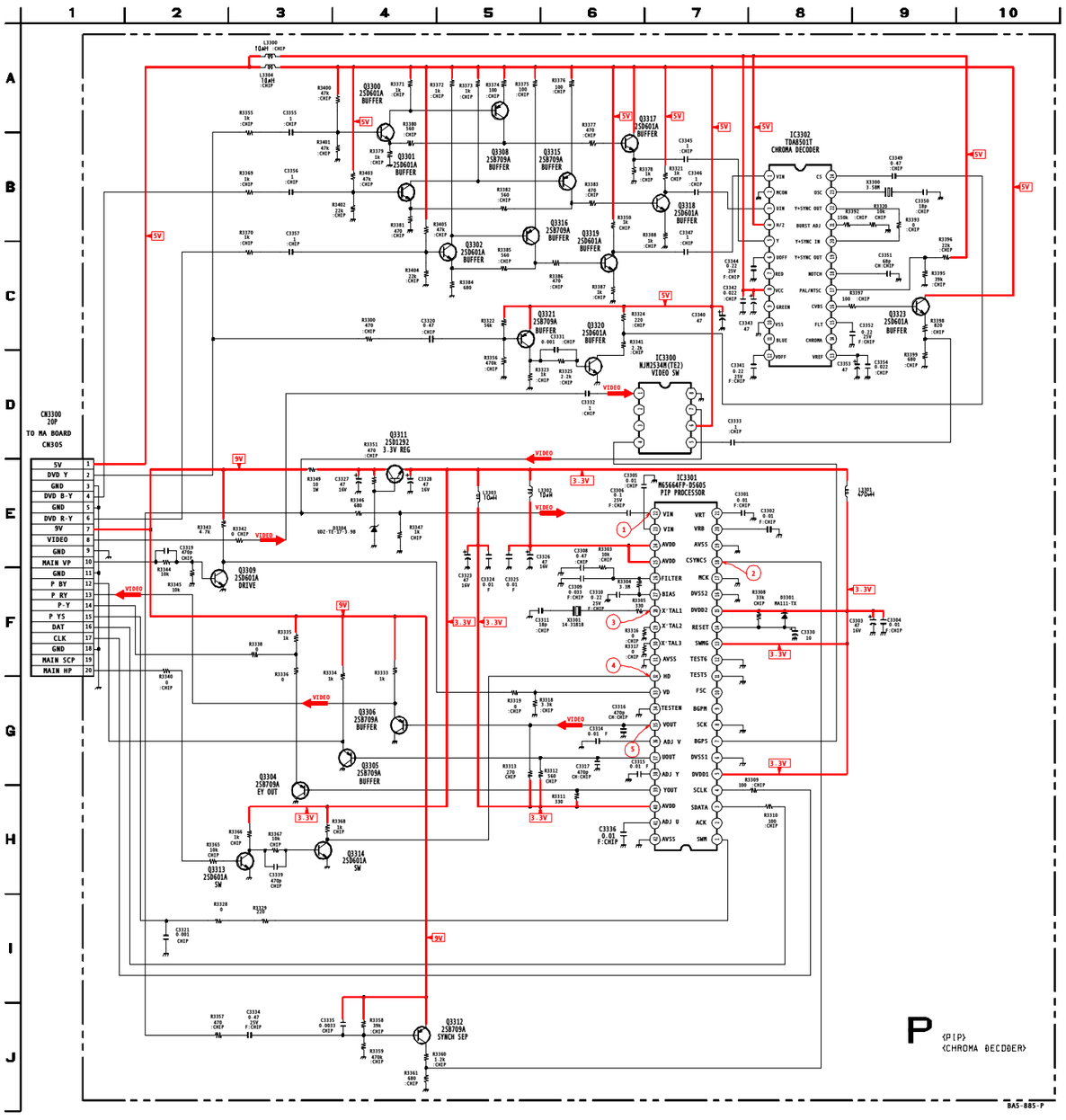


## P [PIP, CHROMA DECODER]

COMPONENT SIDE

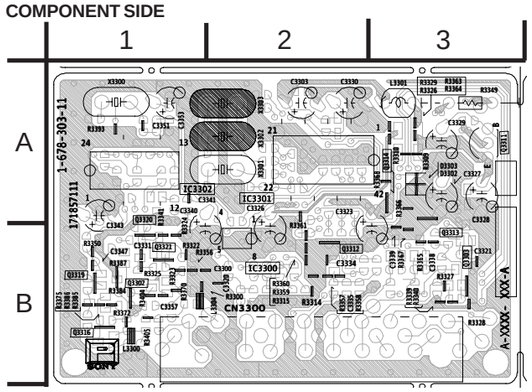


CONDUCTOR SIDE

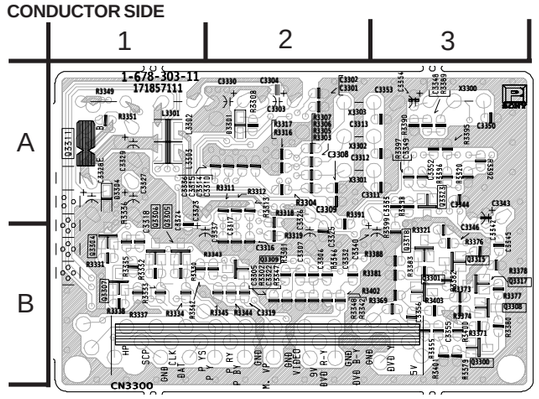


## P BOARD IC VOLTAGE LIST

| IC3300 | | 29 | 0.0 |
|---|---|---|---|
| pin | volt | 30 | 0.0 |
| 1 | 2.6 | 31 | 0.0 |
| 2 | NC | 32 | 0.5 |
| 3 | NC | 33 | 0.0 |
| 4 | 0.0 | 34 | GND |
| 5 | 2.6 | 35 | 3.1 |
| 6 | 5.0 | 36 | 1.1 |
| 7 | 1.8 | 37 | 3.0 |
| 8 | GND | 38 | 1.2 |
| **IC3301** | | 39 | 2.6 |
| pin | volt | 40 | 3.5 |
| 1 | 0.2 | 41 | 1.0 |
| 2 | GND | 42 | GND |
| 3 | 4.7 | **IC3302** | |
| 4 | 4.8 | pin | volt |
| 5 | 3.2 | 1 | 0.0 |
| 6 | GND | 2 | GND |
| 7 | 0.0 | 3 | 0.0 |
| 8 | GND | 4 | 5.0 |
| 9 | NC | 5 | 0.3 |
| 10 | NC | 6 | 2.0 |
| 11 | GND | 7 | NC |
| 12 | GND | 8 | 5.1 |
| 13 | 3.2 | 9 | NC |
| 14 | 3.2 | 10 | GND |
| 15 | 3.2 | 11 | NC |
| 16 | GND | 12 | 2.0 |
| 17 | GND | 13 | 2.5 |
| 18 | 0.3 | 14 | NC |
| 19 | GND | 15 | 0.8 |
| 20 | 0.5 | 16 | 1.7 |
| 21 | 1.6 | 17 | 3.3 |
| 22 | 1.0 | 18 | 1.7 |
| 23 | 0.6 | 19 | NC |
| 24 | 3.4 | 20 | 1.7 |
| 25 | 3.4 | 21 | 2.5 |
| 26 | 1.4 | 22 | 1.7 |
| 27 | 1.7 | 23 | 1.3 |
| 28 | 2.0 | 24 | 1.9 |

All voltages are in V

## P BOARD TRANSISTOR VOLTAGE LIST

| Q3300 | | Q3305 | | Q3311 | | Q3315 | | Q3319 | |
|---|---|---|---|---|---|---|---|---|---|
| pin | volt | pin | volt | pin | volt | pin | volt | pin | volt |
| B | 2.4 | B | 3.0 | B | 4.1 | B | 4.2 | B | 1.9 |
| C | 4.2 | C | GND | C | 7.7 | C | 2.4 | C | 3.8 |
| E | 1.8 | E | 3.7 | E | 3.5 | E | 4.8 | E | 1.3 |
| **Q3301** | | **Q3306** | | **Q3312** | | **Q3316** | | **Q3320** | |
| pin | volt | pin | volt | pin | volt | pin | volt | pin | volt |
| B | 1.6 | B | 3.1 | B | 8.8 | B | 0.0 | B | 0.0 |
| C | 4.2 | C | GND | C | 0.7 | C | 1.9 | C | 5.0 |
| E | 1.0 | E | 3.8 | E | 9.0 | E | 4.9 | E | GND |
| **Q3302** | | **Q3308** | | **Q3313** | | **Q3317** | | **Q3321** | |
| pin | volt | pin | volt | pin | volt | pin | volt | pin | volt |
| B | 1.6 | B | 4.2 | B | 0.2 | B | 2.9 | B | 4.7 |
| C | 4.3 | C | 2.9 | C | 2.7 | C | 5.0 | C | 0.0 |
| E | 1.0 | E | 4.9 | E | GND | E | 2.3 | E | 5.0 |
| **Q3304** | | **Q3309** | | **Q3314** | | **Q3318** | | **Q3323** | |
| pin | volt | pin | volt | pin | volt | pin | volt | pin | volt |
| B | 2.6 | B | 0.7 | B | 0.5 | B | 2.4 | B | 1.8 |
| C | GND | C | 0.0 | C | 0.6 | C | 3.3 | C | 5.0 |
| E | 3.3 | E | GND | E | GND | E | 1.8 | E | 1.1 |

All voltages are in V

## P BOARD WAVEFORMS

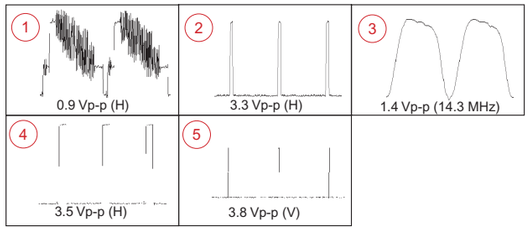

## 6-4. SEMICONDUCTORS

2SA1037AK-7146-QR
2SB709A-QRS-TX
2SD601A-QRS-TX
2SC2412K-T-146-QR

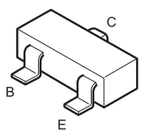


2SB734-7-34
2SC3209LK-TP

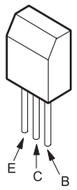


2SC1740S-QRT

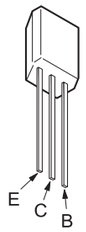


2SA1309A-QRSTA
2SC3311A-QRSTA
2SD2144S-TP-UVW

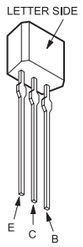


2SC3840K

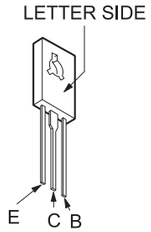


2SA1837
2SC4159-E

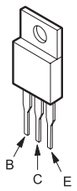


2SA1091O-TPE2
2SA993AS-QRT

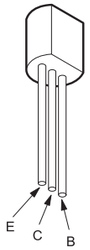


2SK2845-LB102

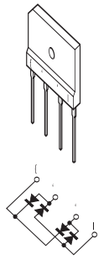

TF541M

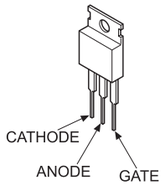


IRF614

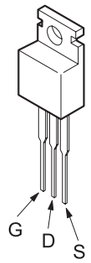


ERA38-06TP1
ERA82-004TP5
1SS133T-77
D1N2OR-TA
D1NS4-TA
MTZJ-T-7712C
MTZJ-T-77-33B
MTZJ-T-77-39

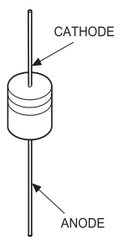


RU-1P
ERC06-15S
MTZJ-T-77-5.1C
MTZJ-T-775.6C
MTZJ-T-77-7.5A
MTZJ-T-77-10B
MTZJ-T-7730D
RD10ES-T1B
RGP10-GPKG3
RGP02-17PKG23

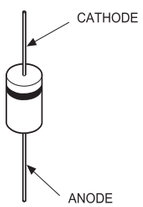


ERB44-06TP1
1SS83TD
D1NL2OU-TA
EL1Z-V1
ERA22-08TP3
GP08DPKG23
RGP10GPKG23
RU4AM-T3

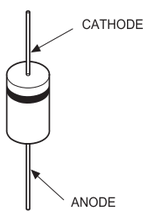


RD9.1EW-T1

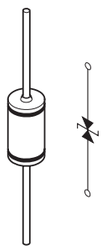

MA111-TX

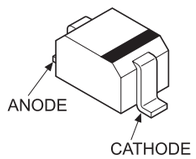


D2SB60A-F04

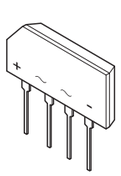

DAP202K-T-146

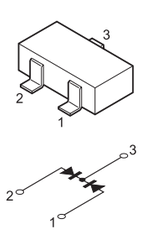


D4SB60L-F

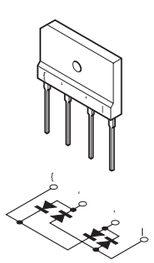

D5LC20U

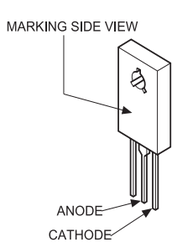




# SECTION 7
# EXPLODED VIEW

- Items with no part number and no description are not stocked because they are seldom required for routine service.
- The component parts of an assembly are indicated by the reference numbers in the remarks column.
- Items marked * are not stocked since they are seldom required for routine service. Some delay should be anticipated when ordering these items.

**Note:**

**The components identified by shading and mark ⚠ are critical for safety. Replace only with part number specified.**

**Note:**

**Les composants identifies per un trame et une marque ⚠ sont critiques pour la securite. Ne les remplacer que par une piece portant le numero specifie.**

## 7-1. CHASSIS (KV-27FV16/29FV16/29FV16 ONLY)

● 7-685-648-79 SCREW +BVTP 3X12
■ 7-685-663-79 SCREW +BVTP 4X16

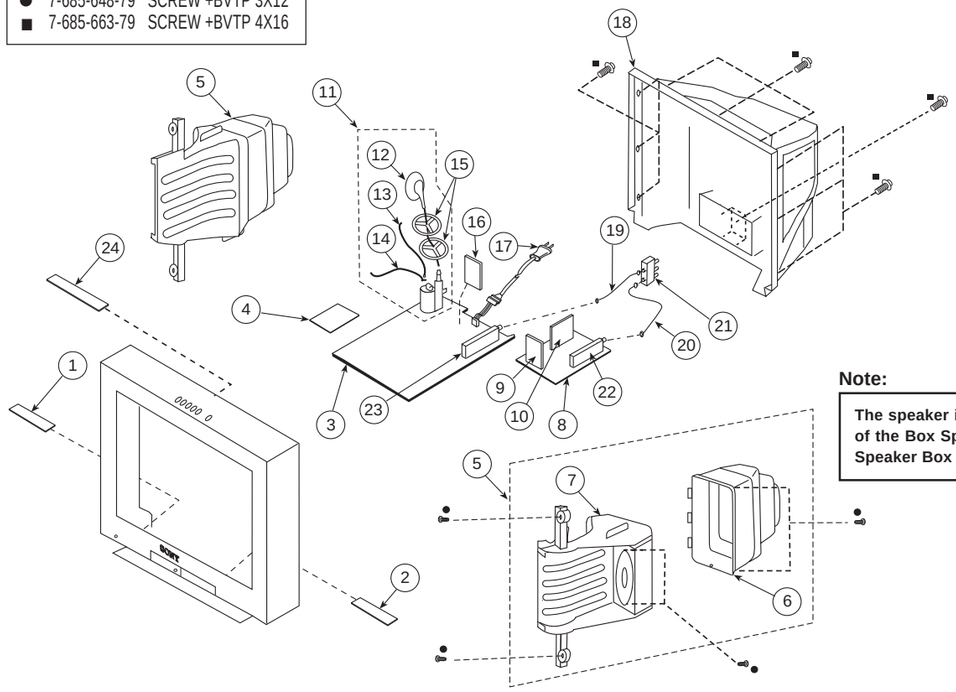


**Note:**

**The speaker itself is part of the Box Speaker/1 Way Speaker Box**

| REF. NO. | | PART NO. | DESCRIPTION | REMARK |
|---|---|---|---|---|
| 1 | * | A-1372-825-A | HA MOUNTED PC BOARD | |
| 2 | * | A-1372-826-A | HB (VAR) MOUNTED PC BOARD | |
| 3 | * | A-1299-244-A | A COMPLETE PC BOARD (KV-29FV16/29FV16C ONLY) | |
| 3 | * | A-1299-243-A | A COMPLETE PC BOARD (KV-27FV16 ONLY) | |
| | | | The high-voltage leads associated with the FBT on this board are not included and must be ordered separately. (See 12-14) | |
| 4 | * | A-1343-875-A | D (VAR) MOUNTED PC BOARD | |
| 5 | * | 1-529-336-11 | BOX, 1 WAY SPEAKER (10CM) (KV-29FV16/29FV26C ONLY) | 6-7 |
| 5 | * | 1-529-358-11 | SPEAKER, BOX (5,10CM) (KV-27FV16 ONLY) | 6-7 |
| 6 | * | 4-068-987-01 | COVER, SPEAKER | |
| 7 | | 4-068-988-01 | BAFFLE, SPEAKER | |
| 8 | * | A-1304-202-A | MA (VAR) MOUNTED PC BOARD | |
| 9 | * | A-1190-367-A | P MOUNTED PC BOARD | |
| 10 | * | A-1131-593-A | BC MOUNTED PC BOARD | |

| REF. NO. | | PART NO. | DESCRIPTION | REMARK |
|---|---|---|---|---|
| 11 | ⚠ | 1-453-310-11 | FBT ASSY NX-4521//X4J4 | 12-14 |
| 12 | | 1-251-374-13 | HV CAP ASSY | |
| 13 | | 1-900-800-82 | FOCUS LEAD | |
| 14 | | 1-900-803-22 | G2 LEAD | |
| 15 | | 3-704-372-71 | HOLDER, HV CABLE | |
| 16 | * | A-1380-633-A | K (VAR) MOUNTED PC BOARD | |
| 17 | ⚠ | 1-792-874-11 | CORD, AC POWER(WITH CONNECTOR) (KV-27FV16 ONLY) | |
| 17 | ⚠ | 1-790-316-21 | CORD, AC POWER(WITH CONNECTOR) (KV-29FV16 ONLY) | |
| 17 | ⚠ | 1-769-796-31 | CORD, POWER (WITH CONNECTOR) (KV-29FV16C ONLY) | |
| 18 | | 4-076-875-01 | COVER, REAR | |
| 19 | * | 1-557-056-31 | CABLE, P-P | |
| 20 | * | 1-783-800-11 | CABLE, PIN | |
| 21 | | 8-598-414-20 | CHANGER, ANTENNA AS-2F | |
| 22 | ⚠ | 8-598-501-00 | TUNER, FSS BTF-FA402 | |
| 23 | ⚠ | 8-598-431-30 | TUNER, FSS BTF-WA411 | |
| 24 | * | A-1372-817-A | HX MOUNTED PC BOARD | |

**Note:**

**The components identified by shading and mark ⚠ are critical for safety. Replace only with part number specified.**

**Note:**

**Les composants identifies per un trame et une marque ⚠ sont critiques pour la securite. Ne les remplacer que par une piece portant le numero specifie.**

## 7-2. PICTURE TUBE (KV-27FV16/29FV16/29FV16 ONLY)

▲ 4-046-765-12 SCREW (7) TAPPING

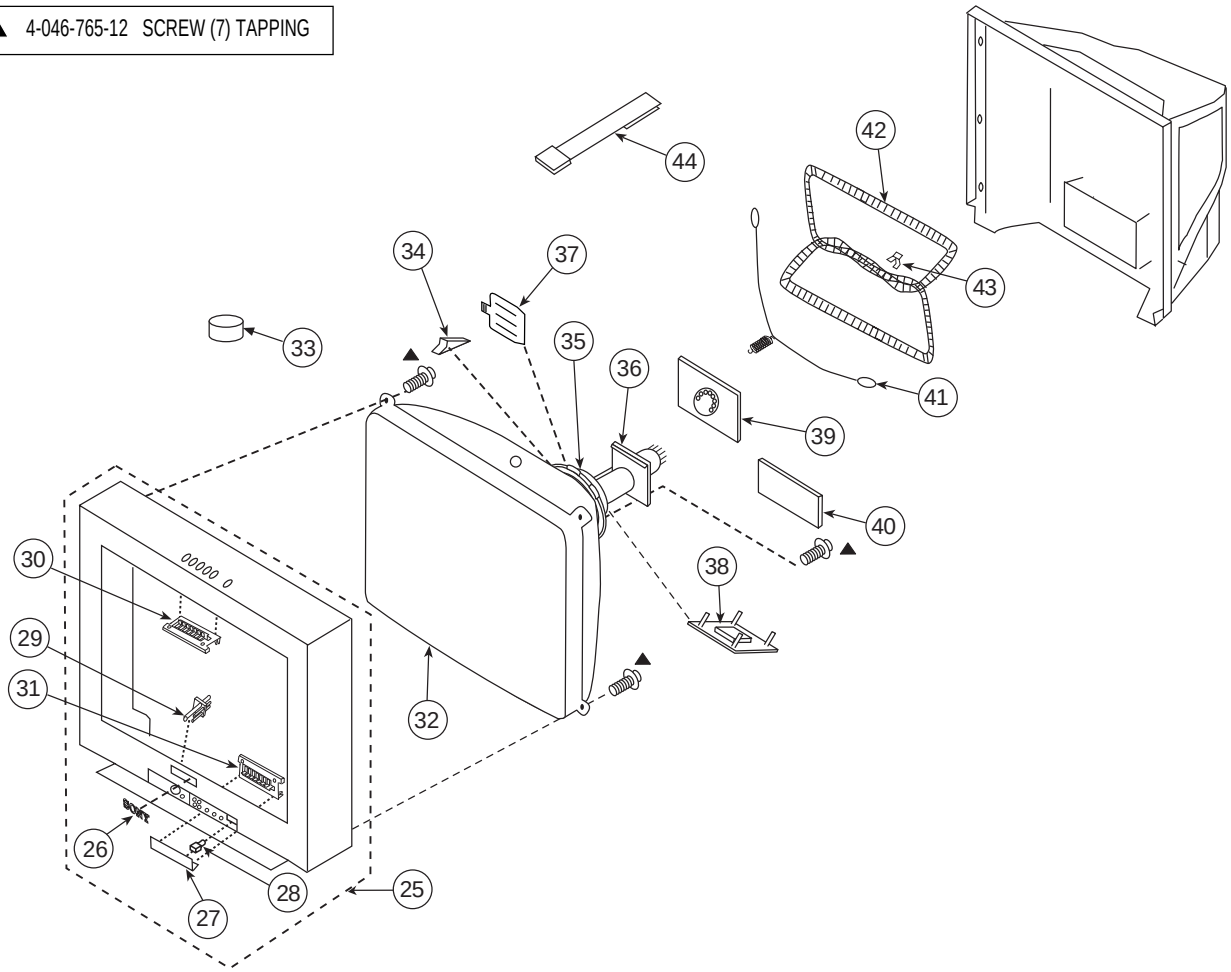


| REF. NO. | | PART NO. | DESCRIPTION | REMARK |
|---|---|---|---|---|
| 25 | | X-4037-842-1 | BEZNET ASSY | 26-28 |
| 26 | | 3-704-179-31 | EMBLEM (NO.9), SONY | |
| 27 | | 4-068-985-04 | DOOR | |
| 28 | | 3-703-574-00 | RETAINER, DOOR | |
| 29 | | 4-068-986-11 | GUIDE, LED | |
| 30 | | 4-068-982-02 | MULTI-BUTTON (TOP) | |
| 31 | | 4-068-984-01 | MULTI-BUTTON (BOTTOM) | |
| 32 | ⚠ | 8-735-041-05 | CRT 29RSN (KV-27FV16/29FV16 ONLY) | |
| 32 | ⚠ | 8-735-052-05 | CRT 29RSN(FOR EQUATORIAL AREA) (KV-29FV16C ONLY) | |
| 33 | | 1-452-032-00 | MAGNET,DISC | |
| 34 | | 4-053-005-01 | SPACER, DY | |
| 35 | ⚠ | 8-451-494-31 | DY Y29RSA-S | |
| 36 | ⚠ | 8-453-011-11 | NA299-M | |

| REF. NO. | | PART NO. | DESCRIPTION | REMARK |
|---|---|---|---|---|
| 37 | | 2-163-920-01 | PLATE, TLH CORRECTION | |
| 38 | | 1-452-896-11 | COIL, NA ROTATION (RT200) | |
| 39 | * | A-1332-063-A | CA (VAR) MOUNTED PC BOARD | |
| 40 | * | A-1342-550-A | VA (VAR) MOUNTED PC BOARD | |
| 41 | | 4-036-329-01 | SPRING (B), TENSION | |
| 42 | ⚠ | 1-419-156-11 | COIL, DEGUASSING (KV-27FV16 ONLY) | |
| 42 | ⚠ | 1-419-523-21 | COIL, DEGAUSSING (KV-29FV16/29FV16C ONLY) | |
| 43 | * | 4-062-970-01 | CLIP (29RSN), DGC | |
| 44 | | 4-062-047-01 | PIECE A(110), CONV CORRECT | |

**Note:**

**The components identified by shading and mark ⚠ are critical for safety. Replace only with part number specified.**

**Note:**

**Les composants identifies per un trame et une marque ⚠ sont critiques pour la securite. Ne les remplacer que par une piece portant le numero specifie.**

## 7-3. CHASSIS (KV-32FS12/32FS16 ONLY)

● 7-685-648-79 SCREW +BVTP 3X12
■ 7-685-663-79 SCREW +BVTP 4X16

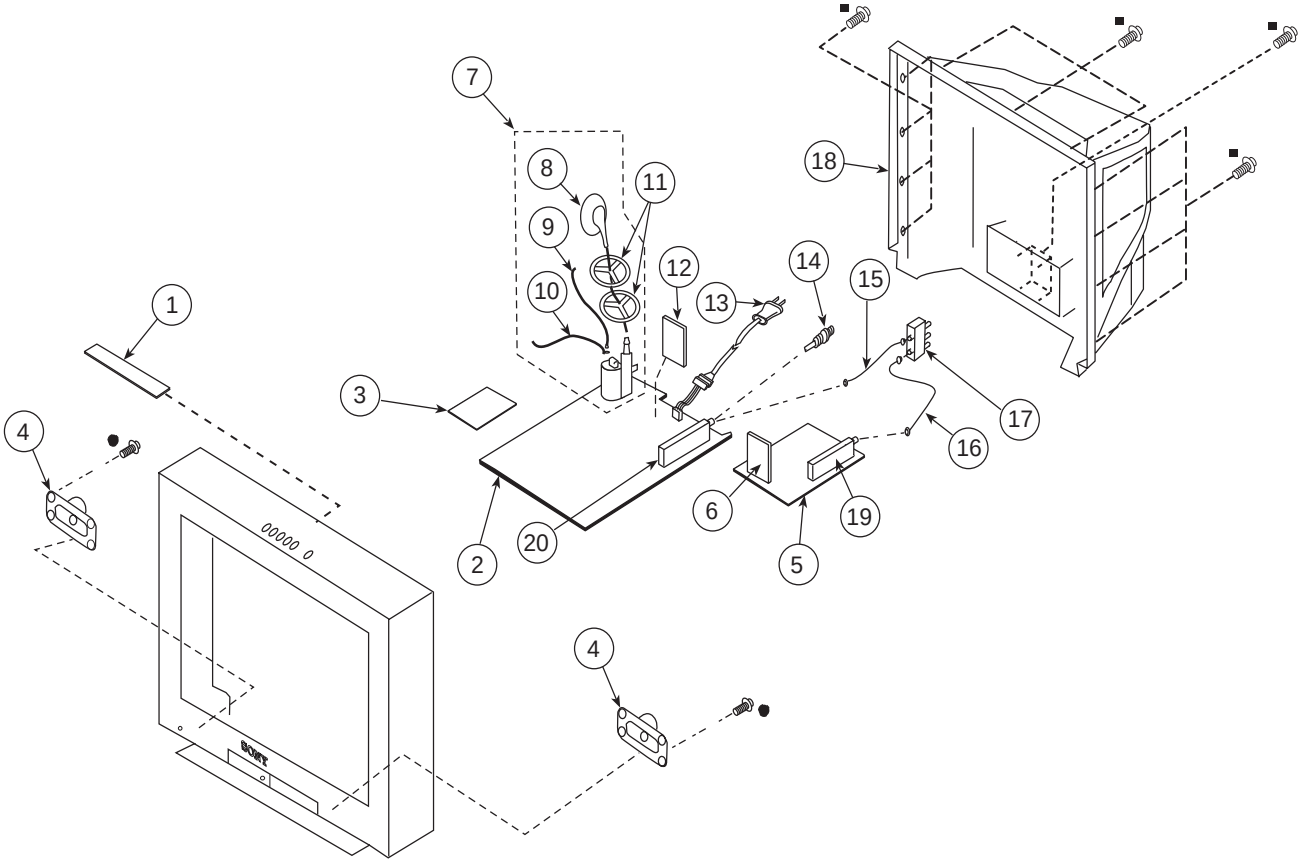


| REF. NO. | | PART NO. | DESCRIPTION | REMARK |
|---|---|---|---|---|
| 1 | * | A-1372-817-A | HX MOUNTED PC BOARD | |
| 2 | * | A-1299-218-A | A COMPLETE PC BOARD | |
| | | | The high-voltage leads associated with the FBT on this board are not included and must be ordered separately. (See 8-10) | |
| 3 | * | A-1343-874-A | D (VAR) MOUNTED PC BOARD | |
| 4 | | 1-529-498-11 | SPEAKER (13.1X6.2CM) | |
| 5 | * | A-1304-203-A | MA (VAR) MOUNTED PC BOARD (KV-32FS12 ONLY) | |
| 5 | * | A-1304-196-A | MA (VAR) MOUNTED PC BOARD (KV-32FS16 ONLY) | |
| 6 | * | A-1190-367-A | P MOUNTED PC BOARD (KV-32FS16 ONLY) | |
| 7 | ⚠ | 1-453-338-11 | FBT ASSY NX-4600//X4J4 | 8-10 |
| 8 | | 1-251-374-13 | HV CAP ASSY | |
| 9 | | 1-900-800-82 | FOCUS LEAD | |
| 10 | | 1-900-803-50 | G2 LEAD | |

| REF. NO. | | PART NO. | DESCRIPTION | REMARK |
|---|---|---|---|---|
| 11 | | 3-704-372-71 | HOLDER, HV CABLE | |
| 12 | * | A-1380-632-A | K (VAR) MOUNTED PC BOARD | |
| 13 | ⚠ | 1-792-874-11 | CORD, AC POWER(WITH CONNECTOR) | |
| 14 | | 1-766-374-11 | PLUG, F-PIN (KV-32FS12 ONLY) | |
| 15 | * | 1-557-056-31 | CABLE, P-P (KV-32FS16 ONLY) | |
| 16 | * | 1-783-800-11 | CABLE, PIN (KV-32FS16 ONLY) | |
| 17 | | 8-598-414-20 | CHANGER, ANTENNA AS-2F (KV-32FS16 ONLY) | |
| 18 | | 4-075-654-11 | COVER, REAR | |
| 19 | ⚠ | 8-598-501-00 | TUNER, FSS BTF-FA402 (KV-32FS16 ONLY) | |
| 20 | ⚠ | 8-598-431-30 | TUNER, FSS BTF-WA411 | |

**Note:**

**The components identified by shading and mark ⚠ are critical for safety. Replace only with part number specified.**

**Note:**

**Les composants identifies per un trame et une marque ⚠ sont critiques pour la securite. Ne les remplacer que par une piece portant le numero specifie.**

## 7-4. PICTURE TUBE (KV-32FS12/32FS16 ONLY)

▲ 4-046-765-12 SCREW (7) TAPPING

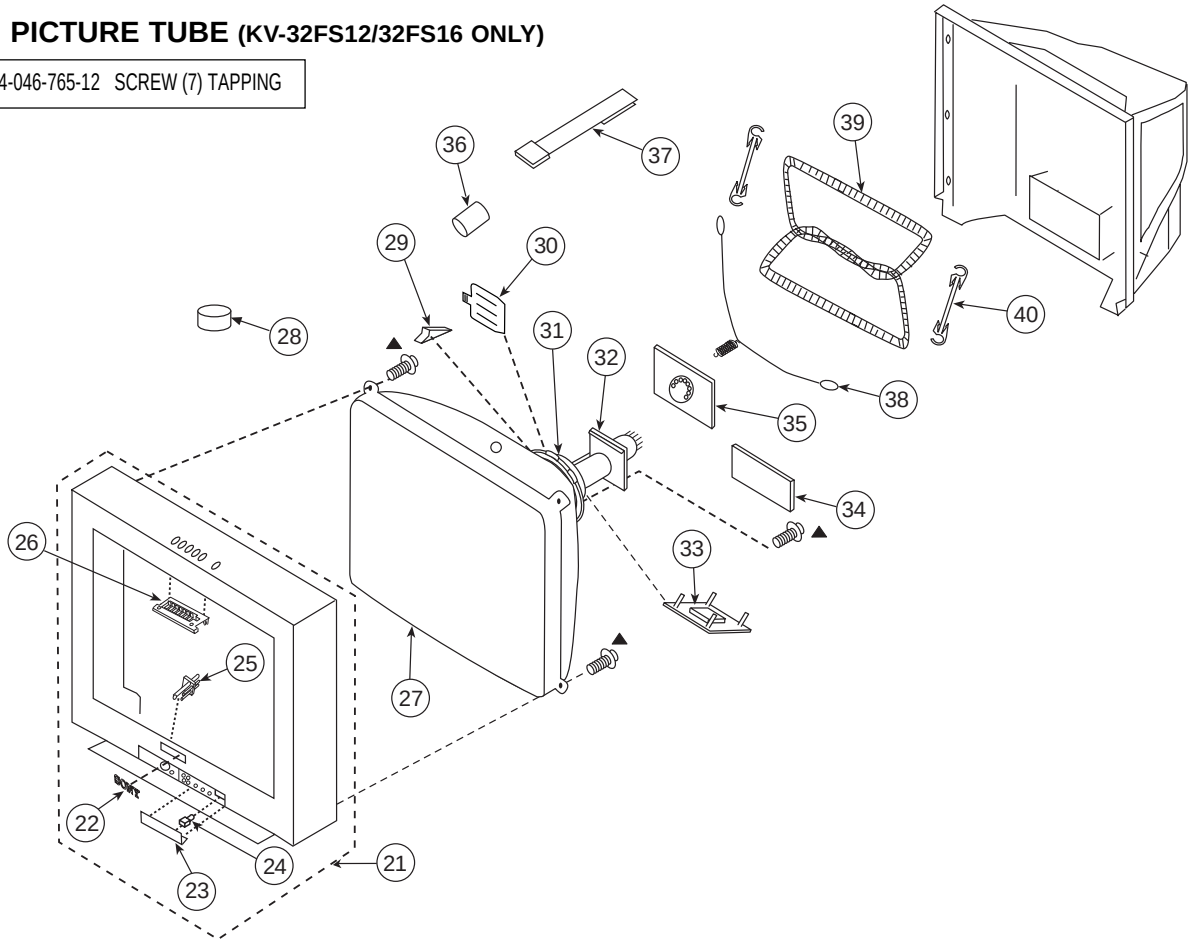


| REF. NO. | | PART NO. | DESCRIPTION | REMARK |
|---|---|---|---|---|
| 21 | | X-4037-664-1 | BEZNET ASSY | 22-25 |
| 22 | | 3-704-179-31 | EMBLEM (NO.9), SONY | |
| 23 | | 4-075-658-01 | DOOR | |
| 24 | | 4-047-464-01 | CATCHER, PUSH | |
| 25 | | 4-075-657-01 | GUIDE, LED | |
| 26 | | 4-068-982-02 | MULTI-BUTTON (TOP) | |
| 27 | ⚠ | 8-735-066-05 | CRT 34RSN(SDP) | |
| 28 | | 1-452-032-00 | MAGNET,DISC | |
| 29 | | 4-053-005-01 | SPACER, DY | |
| 30 | | 2-163-920-01 | PLATE, TLH CORRECTION | |
| 31 | ⚠ | 8-451-499-21 | DY Y34RSA-X | |
| 32 | ⚠ | 8-453-007-41 | NA324-M4 | |
| 33 | | 1-452-896-11 | COIL, NA ROTATION (RT200) | |
| 34 | * | A-1342-549-A | VA (VAR) MOUNTED PC BOARD | |
| 35 | * | A-1332-061-A | CA (VAR) MOUNTED PC BOARD | |
| 36 | | 1-500-586-11 | FILTER, CLAMP (FERRITE CORE) | |
| 37 | | 4-062-047-01 | PIECE A(110), CONV CORRECT | |
| 38 | | 4-036-329-01 | SPRING (B), TENSION | |
| 39 | ⚠ | 1-416-827-21 | COIL, DEGAUSSING | |
| 40 | | 4-065-895-03 | HOLDER, DGC | |

# SECTION 8
# ELECTRICAL PARTS LIST

A

**Note:**

**The components identified by shading and mark ⚠ are critical for safety. Replace only with part number specified.**

**Note:**

**Les composants identifies per un trame et une marque ⚠ sont critiques pour la securite. Ne les remplacer que par une piece portant le numero specifie.**

**The components identified by ⋈ in this manual have been carefully factory-selected for each set in order to satisfy regulations regarding X-ray radiation. Should replacement be required, replace only with the value originally used.**

- Items marked * are not stocked since they are seldom required for routine service. Some delay should be anticipated when ordering these items.
- All variable and adjustable resistors have characteristic curve B, unless otherwise noted.

RESISTORS
- All resistors are in ohms
- F : nonflammable

When indicating parts by reference number, please include the board name.

A

| | | |
|---|---|---|
| * | A-1299-243-A | A COMPLETE PC BOARD (KV-27FV16 ONLY) |
| * | A-1299-244-A | A COMPLETE PC BOARD (KV-29FV16/29FV16C ONLY) |
| * | A-1299-218-A | A COMPLETE PC BOARD (KV-32FS12/32FS16 ONLY) |

The high voltage leads associated with the FBT on this board are not included and must be ordered separately. Order the following leads when requesting this A Board:

| | |
|---|---|
| 1-251-374-13 | HV CAP ASSY |
| 1-900-803-22 | G2 LEAD (All EXCEPT KV-32FS12/32FS16) |
| 1-900-803-50 | G2 LEAD (KV-32FS12/32FS16 ONLY) |
| 1-900-800-82 | FOCUS LEAD |
| 1-533-223-11 | HOLDER, FUSE |
| * 4-374-846-01 | COVER, CAPACITOR, CAP TYPE |
| 4-382-854-11 | SCREW (M3X10), P, SW (+) |

**CAPACITOR**

| REF. NO. | | PART NO. | DESCRIPTION | | | REMARK |
|---|---|---|---|---|---|---|
| C100 | | 1-216-295-91 | SHORT | | | |
| C101 | | 1-216-295-91 | SHORT | | | |
| C102 | | 1-126-933-11 | ELECT | 100µF | 20% | 16V |
| C104 | | 1-126-941-11 | ELECT | 470µF | 20% | 25V |
| C105 | | 1-104-664-11 | ELECT | 47µF | 20% | 25V |
| C204 | | 1-163-017-00 | CERAMIC CHIP | 0.0047µF | 10% | 50V |
| C205 | | 1-126-963-11 | ELECT | 4.7µF | 20% | 50V |
| C210 | | 1-126-963-11 | ELECT | 4.7µF | 20% | 50V |
| C211 | | 1-126-935-11 | ELECT | 470µF | 20% | 16V (KV-27FV16/29FV16/29FV16C ONLY) |
| C212 | | 1-126-963-11 | ELECT | 4.7µF | 20% | 50V (KV-27FV16/29FV16/29FV16C ONLY) |
| C213 | | 1-126-963-11 | ELECT | 4.7µF | 20% | 50V (KV-27FV16/29FV16/29FV16C ONLY) |
| C214 | | 1-164-346-11 | CERAMIC CHIP | 1µF | | 16V |
| C215 | | 1-164-346-11 | CERAMIC CHIP | 1µF | | 16V |
| C216 | | 1-126-963-11 | ELECT | 4.7µF | 20% | 50V |
| C219 | | 1-126-964-11 | ELECT | 10µF | 20% | 50V |
| C401 | | 1-126-968-11 | ELECT | 100µF | 20% | 50V (KV-27FV16/29FV16/29FV16C ONLY) |
| C402 | | 1-126-972-11 | ELECT | 1000µF | 20% | 50V (KV-27FV16/29FV16/29FV16C ONLY) |
| C402 | | 1-126-943-11 | ELECT | 2200µF | 20% | 25V (KV-32FS12/32FS16 ONLY) |
| C403 | | 1-126-957-11 | ELECT | 0.22µF | 20% | 50V |
| C420 | | 1-164-222-11 | CERAMIC CHIP | 0.22µF | | 25V |
| C421 | | 1-164-222-11 | CERAMIC CHIP | 0.22µF | | 25V |
| C435 | | 1-164-222-11 | CERAMIC CHIP | 0.22µF | | 25V (KV-27FV16/29FV16/29FV16C ONLY) |
| C441 | | 1-164-346-11 | CERAMIC CHIP | 1µF | | 16V |
| C442 | | 1-126-963-11 | ELECT | 4.7µF | 20% | 50V |
| C501 | | 1-102-114-00 | CERAMIC | 470PF | 10% | 50V |
| C502 | | 1-106-383-00 | MYLAR | 0.047µF | 10% | 200V |
| C503 | | 1-102-228-00 | CERAMIC | 470PF | 10% | 500V |
| C504 | | 1-102-228-00 | CERAMIC | 470PF | 10% | 500V |
| C505 | ⚠ | 1-162-116-00 | CERAMIC | 680PF | 10% | 2KV |
| C506 | | 1-162-318-11 | CERAMIC | 0.001µF | 10% | 500V |
| C507 | ⚠ | 1-117-717-11 | FILM | 17000PF | 3% | 1.2KV (KV-27FV16/29FV16/29FV16C ONLY) |
| C507 | ⚠ | 1-117-652-11 | FILM | 22000PF | 3% | 1.2KV (KV-32FS12/32FS16 ONLY) |
| C508 | ⚠ | 1-137-150-11 | MYLAR | 0.01µF | 10% | 100V |
| C509 | ⚠ | 1-162-116-00 | CERAMIC | 680PF | 10% | 2KV |
| C510 | | 1-107-649-11 | ELECT | 2.2µF | 20% | 250V |
| C511 | ⚠ | 1-115-522-11 | FILM | 1µF | 5% | 250V (KV-27FV16/29FV16/29FV16C ONLY) |
| C511 | ⚠ | 1-115-521-11 | FILM | 0.82µF | 5% | 250V (KV-32FS12/32FS16 ONLY) |
| C512 | ⚠ | 1-106-387-00 | MYLAR | 0.068µF | 10% | 200V |
| C513 | | 1-104-987-11 | MYLAR | 0.001µF | 10% | 100V |
| C514 | | 1-109-844-11 | FILM | 0.68µF | 5% | 250V (KV-27FV16/29FV16/29FV16C ONLY) |
| C514 | | 1-115-521-11 | FILM | 0.82µF | 5% | 250V (KV-32FS12/32FS16 ONLY) |
| C515 | ⚠ | 1-162-116-00 | CERAMIC | 680PF | 10% | 2KV |

A

**Note:**

**The components identified by shading and mark ⚠ are critical for safety. Replace only with part number specified.**

**Note:**

**Les composants identifies per un trame et une marque ⚠ sont critiques pour la securite. Ne les remplacer que par une piece portant le numero specifie.**

| REF.NO. | | PART NO. | DESCRIPTION | REMARK | | |
|---|---|---|---|---|---|---|
| C517 | | 1-107-846-11 | FILM | 0.1µF | 5% | 250V |
| | | | (KV-32FS12/32FS16 ONLY) | | | |
| C520 | ⚠ | 1-129-722-00 | FILM | 0.047µF | 5% | 630V |
| | | | (KV-27FV16/29FV16/29FV16C ONLY) | | | |
| C520 | ⚠ | 1-130-118-91 | FILM | 0.051µF | 5% | 400V |
| | | | (KV-32FS12/32FS16 ONLY) | | | |
| C521 | | 1-164-646-11 | CERAMIC | 2200PF | 10% | 500V |
| C523 | | 1-126-941-11 | ELECT | 470µF | 20% | 25V |
| C524 | | 1-102-244-00 | CERAMIC | 220PF | 10% | 500V |
| C525 | | 1-107-612-11 | CERAMIC | 100PF | 5% | 500V |
| C526 | | 1-126-960-11 | ELECT | 1µF | 20% | 50V |
| C527 | | 1-126-965-11 | ELECT | 22µF | 20% | 50V |
| C528 | | 1-164-161-11 | CERAMIC CHIP | 0.0022µF | 10% | 50V |
| C529 | | 1-164-161-11 | CERAMIC CHIP | 0.0022µF | 10% | 50V |
| C530 | | 1-164-161-11 | CERAMIC CHIP | 0.0022µF | 10% | 50V |
| | | | (KV-27FV16/29FV16/29FV16C ONLY) | | | |
| C530 | | 1-163-009-11 | CERAMIC CHIP | 0.001µF | 10% | 50V |
| | | | (KV-32FS12/32FS16 ONLY) | | | |
| C531 | | 1-106-387-00 | MYLAR | 0.068µF | 10% | 200V |
| C533 | | 1-126-941-11 | ELECT | 470µF | 20% | 25V |
| C534 | ⚠ | 1-126-964-11 | ELECT | 10µF | 20% | 50V |
| C535 | | 1-126-959-11 | ELECT | 0.47µF | 20% | 50V |
| C536 | | 1-102-228-00 | CERAMIC | 470PF | 10% | 500V |
| C537 | ⚠ | 1-126-965-11 | ELECT | 22µF | 20% | 50V |
| C539 | | 1-107-662-11 | ELECT | 22µF | 20% | 250V |
| C540 | | 1-107-645-11 | ELECT | 22µF | 20% | 160V |
| C541 | | 1-126-969-11 | ELECT | 220µF | 20% | 50V |
| C542 | | 1-126-967-11 | ELECT | 47µF | 20% | 50V |
| C543 | | 1-136-169-00 | MYLAR | 0.22µF | 5% | 50V |
| C546 | ⚠ | 1-126-965-11 | ELECT | 22µF | 20% | 50V |
| C547 | ⚠ | 1-163-031-11 | CERAMIC CHIP | 0.01µF | | 50V |
| C548 | | 1-104-710-11 | ELECT | 22µF | | 160V |
| | | | (KV-27FV16/29FV16/29FV16C ONLY) | | | |
| C548 | | 1-107-995-11 | ELECT | 100µF | | 160V |
| | | | (KV-32FS12/32FS16 ONLY) | | | |
| C549 | | 1-126-934-11 | ELECT | 220µF | 20% | 16V |
| C550 | | 1-107-846-11 | FILM | 0.1µF | 5% | 250V |
| | | | (KV-27FV16/29FV16/29FV16C ONLY) | | | |
| C550 | | 1-117-667-11 | FILM | 0.47µF | 5% | 250V |
| | | | (KV-32FS12/32FS16 ONLY) | | | |
| C551 | ⚠ | 1-137-417-11 | MYLAR | 0.0047µF | 10% | 200V |
| C553 | | 1-107-662-11 | ELECT | 22µF | 20% | 250V |
| C554 | | 1-102-110-00 | CERAMIC | 220PF | 10% | 50V |
| C555 | ⚠ | 1-117-629-11 | FILM | 2700PF | 3% | 1.2KV |
| | | | (KV-27FV16/29FV16/29FV16C ONLY) | | | |
| C555 | | 1-117-635-11 | FILM | 4700PF | 3% | 1.2KV |
| | | | (KV-32FS12/32FS16 ONLY) | | | |
| C601 | | 1-164-004-11 | CERAMIC CHIP | 0.1µF | 10% | 25V |
| C602 | | 1-126-967-11 | ELECT | 47µF | 20% | 50V |
| C604 | | 1-164-182-11 | CERAMIC CHIP | 0.0033µF | 10% | 50V |
| C606 | ⚠ | 1-127-795-51 | CERAMIC | 3300PF | 20% | 250V |
| C607 | ⚠ | 1-136-311-11 | MYLAR | 0.47µF | 20% | 300V |
| | | | (KV-29FV16/29FV16C ONLY) | | | |
| C607 | ⚠ | 1-136-311-11 | MYLAR | 0.47µF | 20% | 125V |
| | | | (ALL EXCEPT 29FV16/29FV16C) | | | |
| C609 | | 1-126-968-11 | ELECT | 100µF | 20% | 50V |
| C610 | | 1-126-964-11 | ELECT | 10µF | 20% | 50V |
| C611 | ⚠ | 1-127-795-51 | CERAMIC | 3300PF | 20% | 250V |
| C612 | ⚠ | 1-113-611-11 | ELECT(BLOCK) | 820µF | 20% | 250V |
| | | | (ALL EXCEPT KV-29FV16/29FV16C) | | | |
| C613 | | 1-126-964-11 | ELECT | 10µF | 20% | 50V |
| C614 | | 1-130-495-00 | MYLAR | 0.1µF | 5% | 50V |
| C615 | | 1-130-202-00 | FILM | 0.022µF | 10% | 400V |
| | | | (KV-29FV16/29FV16C ONLY) | | | |
| C616 | | 1-107-824-11 | CERAMIC | 220PF | 5% | 1KV |
| | | | (KV-29FV16/29FV16C ONLY) | | | |
| C617 | | 1-125-893-11 | FILM | 680PF | 3% | 1.5KV |
| C618 | | 1-164-081-11 | CERAMIC | 470PF | 10% | 50V |
| C619 | | 1-136-356-11 | MYLAR | 470PF | 5% | 50V |
| C620 | | 1-104-665-11 | ELECT | 100µF | 20% | 25V |
| C621 | | 1-125-772-91 | CERAMIC | 1500PF | 10% | 2KV |
| C622 | | 1-164-625-11 | CERAMIC | 680PF | 10% | 500V |
| C623 | | 1-164-625-11 | CERAMIC | 680PF | 10% | 500V |
| C624 | | 1-131-867-51 | ELECT | 100µF | | 160V |
| C625 | | 1-135-572-51 | ELECT | 1000µF | 20% | 50V |
| | | | (KV-27FV16/29FV16/29FV16C ONLY) | | | |
| C625 | | 1-135-412-51 | ELECT | 1000µF | 20% | 25V |
| | | | (KV-32FS12/32FS16 ONLY) | | | |
| C626 | | 1-135-573-51 | ELECT | 15000µF | 20% | 25V |
| C627 | | 1-136-189-00 | MYLAR | 0.1µF | 10% | 250V |
| C628 | | 1-104-665-11 | ELECT | 100µF | 20% | 25V |
| C630 | | 1-113-924-11 | CERAMIC | 0.0047µF | 20% | 250V |
| | | | (ALL EXCEPT KV-29FV16/29FV16C) | | | |
| C631 | | 1-113-924-11 | CERAMIC | 0.0047µF | 20% | 250V |
| | | | (ALL EXCEPT KV-29FV16/29FV16C) | | | |
| C634 | | 1-137-605-11 | MYLAR | 0.01µF | 10% | 250V |
| C635 | | 1-163-009-11 | CERAMIC CHIP | 0.001µF | 10% | 50V |
| C636 | | 1-126-970-11 | ELECT | 330µF | 20% | 50V |
| C637 | | 1-163-009-11 | CERAMIC CHIP | 0.001µF | 10% | 50V |
| C638 | | 1-163-005-11 | CERAMIC CHIP | 470PF | 10% | 50V |
| C639 | | 1-126-965-11 | ELECT | 22µF | 20% | 50V |
| C641 | | 1-107-679-91 | ELECT | 10µF | 20% | 450V |
| C643 | | 1-104-760-11 | CERAMIC CHIP | 0.047µF | 10% | 50V |
| C644 | | 1-161-964-91 | CERAMIC | 0.0047µF | | 250V |
| C645 | | 1-161-964-91 | CERAMIC | 0.0047µF | | 250V |
| C646 | | 1-161-964-91 | CERAMIC | 0.0047µF | | 250V |
| C647 | | 1-161-964-91 | CERAMIC | 0.0047µF | | 250V |
| C648 | | 1-136-346-21 | MYLAR | 0.22µF | 20% | 300V |
| | | | (KV-29FV16/29FV16C ONLY) | | | |
| C648 | | 1-136-346-21 | MYLAR | 0.22µF | 20% | 125V |
| | | | (ALL EXCEPT 29FV16/29FV16C) | | | |

A

**Note:**

**The components identified by shading and mark ⚠ are critical for safety. Replace only with part number specified.**

**Note:**

**Les composants identifies per un trame et une marque ⚠ sont critiques pour la securite. Ne les remplacer que par une piece portant le numero specifie.**

| REF.NO. | | PART NO. | DESCRIPTION | REMARK | | |
|---|---|---|---|---|---|---|
| C649 | | 1-161-830-00 | CERAMIC | 0.0047µF | 20% | 500V |
| | | | (KV-27FV16/29FV16/29FV16C ONLY) | | | |
| C652 | | 1-130-471-00 | MYLAR | 0.001µF | 5% | 50V |
| C654 | | 1-107-636-11 | ELECT | 10µF | 20% | 160V |
| C655 | ⚠ | 1-136-311-11 | MYLAR | 0.47µF | 20% | 125V |
| C657 | | 1-104-664-11 | ELECT | 47µF | 20% | 25V |
| C658 | | 1-135-572-51 | ELECT | 1000µF | 20% | 50V |
| | | | (KV-27FV16/29FV16/29FV16C ONLY) | | | |
| C658 | | 1-135-412-51 | ELECT | 1000µF | 20% | 25V |
| | | | (KV-32FS12/32FS16 ONLY) | | | |
| C659 | | 1-135-573-51 | ELECT | 15000µF | 20% | 25V |
| C660 | ⚠ | 1-128-714-11 | ELECT | 330µF | 20% | 400V |
| | | | (KV-29FV16/29FV16C ONLY) | | | |
| C661 | ⚠ | 1-128-714-11 | ELECT | 330µF | 20% | 400V |
| | | | (KV-29FV16/29FV16C ONLY) | | | |
| C699 | | 1-117-703-11 | CERAMIC | 0.0047µF | 20% | 250V |
| | | | (ALL EXCEPT KV-29FV16/29FV16C) | | | |
| C2001 | | 1-104-664-11 | ELECT | 47µF | 20% | 25V |

**CONNECTOR**

| | | | |
|---|---|---|---|
| CN301 | * | 1-564-507-11 | PLUG, CONNECTOR 4P |
| CN406 | * | 1-564-507-11 | PLUG, CONNECTOR 4P |
| CN460 | | 1-573-298-21 | CONNECTOR, BOARD TO BOARD 20P |
| CN501 | * | 1-580-798-11 | CONNECTOR PIN (DY) 6P |
| CN502 | * | 1-564-509-11 | PLUG, CONNECTOR 6P |
| CN503 | * | 1-564-512-11 | PLUG, CONNECTOR 9P |
| | | | (KV-27FV16/29FV16/29FV16C ONLY) |
| CN504 | * | 1-508-784-21 | PIN, CONNECTOR (5MM PITCH) 1P |
| CN506 | * | 1-564-508-11 | PLUG, CONNECTOR 5P |
| CN515 | * | 1-564-510-11 | PLUG, CONNECTOR 7P |
| CN602 | * | 1-580-843-11 | PIN, CONNECTOR (POWER) |
| CN603 | * | 1-573-963-11 | PIN, CONNECTOR (PC BOARD) 3P |
| CN604 | * | 1-573-963-11 | PIN, CONNECTOR (PC BOARD) 3P |
| | | | (KV-32FS12/32FS16 ONLY) |
| CN2001* | | 1-764-334-11 | PLUG, CONNECTOR 11P |
| | | | (KV-27FV16/29FV16/29FV16C ONLY) |
| CN2001* | | 1-564-511-11 | PLUG, CONNECTOR 8P |
| | | | (KV-32FS12/32FS16 ONLY) |
| CN2003* | | 1-564-506-11 | PLUG, CONNECTOR 3P |
| CN2004* | | 1-564-508-11 | PLUG, CONNECTOR 5P |
| | | | (KV-27FV16/29FV16/29FV16C ONLY) |
| CN2005* | | 1-764-333-11 | PLUG, CONNECTOR 10P |
| CN2006* | | 1-764-333-11 | PLUG, CONNECTOR 10P |
| CN2007* | | 1-564-512-11 | PLUG, CONNECTOR 9P |
| CN2008* | | 1-564-512-11 | PLUG, CONNECTOR 9P |

**DIODE**

| | | | |
|---|---|---|---|
| D201 | | 8-719-108-12 | DIODE RD9.1EW-T1 |
| | | | (KV-27FV16/29FV16/29FV16C ONLY) |
| D202 | | 8-719-108-12 | DIODE RD9.1EW-T1 |
| | | | (KV-27FV16/29FV16/29FV16C ONLY) |
| D203 | | 8-719-108-12 | DIODE RD9.1EW-T1 |
| | | | (KV-27FV16/29FV16/29FV16C ONLY) |
| D204 | | 8-719-982-22 | DIODE MTZJ-T-77-30D |
| D205 | | 8-719-108-12 | DIODE RD9.1EW-T1 |
| D206 | | 8-719-108-12 | DIODE RD9.1EW-T1 |
| D208 | | 8-719-110-17 | DIODE MTZJ-T-77-10B |
| D209 | | 8-719-977-22 | DIODE UDZ-TE-17-9.1B |
| D210 | | 8-719-110-17 | DIODE MTZJ-T-77-10B |
| D211 | | 8-719-108-12 | DIODE RD9.1EW-T1 |
| D212 | | 8-719-110-17 | DIODE MTZJ-T-77-10B |
| | | | (KV-32FS12/32FS16 ONLY) |
| D213 | | 8-719-110-17 | DIODE MTZJ-T-77-10B |
| | | | (KV-32FS12/32FS16 ONLY) |
| D214 | | 8-719-108-12 | DIODE RD9.1EW-T1 |
| D215 | | 8-719-108-12 | DIODE RD9.1EW-T1 |
| D216 | | 1-216-025-91 | RES-CHIP 100 5% 1/10W |
| | | | (KV-27FV16/29FV16/29FV16C ONLY) |
| D230 | | 8-719-108-12 | DIODE RD9.1EW-T1 |
| D231 | | 8-719-108-12 | DIODE RD9.1EW-T1 |
| D232 | | 8-719-108-12 | DIODE RD9.1EW-T1 |
| D233 | | 8-719-108-12 | DIODE RD9.1EW-T1 |
| D234 | | 8-719-977-22 | DIODE UDZ-TE-17-9.1B |
| | | | (KV-27FV16/29FV16/29FV16C ONLY) |
| D235 | | 8-719-977-22 | DIODE UDZ-TE-17-9.1B |
| | | | (KV-27FV16/29FV16/29FV16C ONLY) |
| D236 | | 8-719-977-22 | DIODE UDZ-TE-17-9.1B |
| | | | (KV-27FV16/29FV16/29FV16C ONLY) |
| D401 | | 8-719-110-17 | DIODE MTZJ-T-77-10B |
| D501 | | 8-719-945-80 | DIODE ERC06-15S |
| D502 | | 8-719-908-03 | DIODE GP08DPKG23 |
| D503 | | 8-719-908-03 | DIODE GP08DPKG23 |
| D504 | | 8-719-945-80 | DIODE ERC06-15S |
| D505 | | 8-719-312-10 | DIODE RU4AM-T3 |
| D506 | | 8-719-302-43 | DIODE RGP10GPKG3 |
| D507 | | 8-719-991-33 | DIODE 1SS133T-77 |
| D508 | | 8-719-991-33 | DIODE 1SS133T-77 |
| D509 | | 8-719-109-89 | DIODE MTZJ-T-77-5.6C |
| D510 | | 8-719-908-03 | DIODE GP08DPKG23 |
| D511 | | 8-719-302-43 | DIODE RGP10GPKG23 |
| D512 | | 8-719-073-01 | DIODE MA111-TX |
| D513 | | 8-719-979-85 | DIODE RGP15GPKG23 |
| D514 | | 8-719-979-85 | DIODE RGP15GPKG23 |
| D515 | | 8-719-073-01 | DIODE MA111-TX |
| D516 | ⚠ | 8-719-991-33 | DIODE 1SS133T-77 |
| D517 | ⚠ | 8-719-991-33 | DIODE 1SS133T-77 |
| D518 | ⚠ | 8-719-921-63 | DIODE MTZJ-T-77-7.5X |
| D519 | ⚠ | 8-719-302-43 | DIODE EL1Z-V1 |
| D520 | ⚠ | 8-719-073-01 | DIODE MA111-TX |
| D521 | | 8-719-991-33 | DIODE 1SS133T-77 |
| D522 | | 8-719-991-33 | DIODE 1SS133T-77 |

A

**Note:**

**The components identified by shading and mark ⚠ are critical for safety. Replace only with part number specified.**

**Note:**

**Les composants identifies per un trame et une marque ⚠ sont critiques pour la securite. Ne les remplacer que par une piece portant le numero specifie.**

| REF.NO. | | PART NO. | DESCRIPTION | REMARK |
|---|---|---|---|---|
| D601 | | 8-719-991-33 | DIODE 1SS133T-77 | |
| D602 | | 8-719-991-33 | DIODE 1SS133T-77 | |
| D603 | | 8-719-982-26 | DIODE MTZJ-T-77-33B | |
| D604 | | 8-719-028-72 | DIODE RGP02-17PKG23 | |
| D605 | ⚠ | 8-719-510-53 | DIODE D4SB60L-F | |
| D606 | ⚠ | 8-719-108-18 | DIODE TF541M | |
| D607 | | 8-719-991-33 | DIODE 1SS133T-77 | |
| D608 | | 8-719-110-53 | DIODE MTZJ-T-77-20B | |
| D609 | | 8-719-311-31 | DIODE RU-1P (KV-29FV16/29FV16C ONLY) | |
| D610 | | 8-719-510-02 | DIODE D1NS4-TA | |
| D611 | | 8-719-063-70 | DIODE D1NL20U-TA | |
| D612 | | 8-719-110-17 | DIODE MTZJ-T-77-10B | |
| D613 | | 8-719-063-70 | DIODE D1NL20U-TA | |
| D614 | | 8-719-063-70 | DIODE D1NL20U-TA | |
| D615 | | 8-719-312-10 | DIODE RU4AM-T3 | |
| D616 | | 8-719-510-37 | DIODE D5LC20U | |
| D617 | | 8-719-110-31 | DIODE MTZJ-T-77-12C | |
| D618 | | 8-719-991-33 | DIODE 1SS133T-77 | |
| D619 | | 8-719-110-17 | DIODE MTZJ-T-77-10B | |
| D620 | | 8-719-510-37 | DIODE D5LC20U | |
| D622 | | 8-719-077-76 | DIODE D2SB60A-F04 | |
| D623 | | 8-719-948-45 | DIODE ERA22-08TP3 | |
| D624 | | 8-719-991-33 | DIODE 1SS133T-77 | |
| D625 | | 8-719-991-33 | DIODE 1SS133T-77 | |
| D626 | | 8-719-063-70 | DIODE D1NL20U-TA | |
| D627 | | 8-719-110-03 | DIODE MTZJ-T-77-7.5A | |
| D628 | | 8-719-510-48 | DIODE D1N20R-TA | |
| D2001 | | 8-719-070-80 | DIODE LNK0120022G (KV-32FS12/32FS16 ONLY) | |
| D2002 | | 8-719-110-17 | DIODE MTZJ-T-77-10B | |
| D2003 | | 8-719-108-12 | DIODE RD9.1EW-T1 (KV-32FS12/32FS16 ONLY) | |
| D2004 | | 8-719-921-44 | DIODE MTZJ-T-77-5.1C | |
| D2005 | | 8-719-921-44 | DIODE MTZJ-T-77-5.1C | |

## FUSE

| | | | | |
|---|---|---|---|---|
| F601 | ⚠ | 1-532-506-51 | FUSE 6.3A/250V (KV-29FV16/29FV16C ONLY) | |
| F601 | ⚠ | 1-576-193-11 | FUSE 6.3A/125V (ALL EXCEPT KV-29FV16/29FV16C) | |

## FERRITE BEAD

| | | | | |
|---|---|---|---|---|
| FB501 | | 1-410-397-21 | FERRITE | 1.1µH |
| FB502 | | 1-410-397-21 | FERRITE | 1.1µH |
| FB503 | | 1-410-397-21 | FERRITE | 1.1µH |
| FB600 | | 1-412-911-11 | FERRITE | 0µH |
| FB601 | | 1-412-911-11 | FERRITE | 0µH |
| FB602 | | 1-412-911-11 | FERRITE | 0µH |
| FB603 | | 1-412-911-11 | FERRITE | 0µH |
| FB604 | | 1-412-911-11 | FERRITE | 0µH |
| FB605 | | 1-412-911-11 | FERRITE | 0µH |
| FB606 | | 1-412-911-11 | FERRITE | 0µH |
| FB609 | | 1-412-911-11 | FERRITE | 0µH |
| FB610 | | 1-412-911-11 | FERRITE | 0µH |

## IC

| | | | | |
|---|---|---|---|---|
| IC401 | | 8-759-490-17 | IC TDA7057AQ/N2 (KV-32FS12/32FS16 ONLY) | |
| IC402 | | 8-759-573-40 | IC TDA8580Q/N1 (KV-27FV16/29FV16/29FV16C ONLY) | |
| IC501 | ⚠ | 8-759-700-07 | IC NJM2903M-TE2 | |
| IC502 | | 8-759-980-58 | IC TDA8172 (KV-27FV16/29FV16/29FV16C ONLY) | |
| IC502 | | 8-759-192-71 | IC STV9379 (KV-32FS12/32FS16 ONLY) | |
| IC601 | ⚠ | 8-749-014-48 | IC STR-F6656 (KV-29FV16\29FV16C ONLY) | |
| IC601 | ⚠ | 8-749-015-61 | IC STR-F6626 (ALL EXCEPT KV-29FV16/29FV16C) | |
| IC602 | ⚠ | 8-749-016-47 | IC EA135-F12 | |
| IC603 | | 8-759-198-03 | IC PQ09RF21 | |
| IC604 | | 8-759-701-75 | IC NJM7805FA | |
| IC2001 | | 8-742-212-20 | HYB IC SBX3081-71 (KV-32FS12/32FS16 ONLY) | |

## JACK

| | | | | |
|---|---|---|---|---|
| J201 | | 1-794-119-11 | TERMINAL BLOCK, S 4P | |
| J202 | | 1-794-267-11 | JACK, PIN 3P (KV-32FS12/32FS16 ONLY) | |
| J203 | | 1-794-118-11 | JACK BLOCK, PIN 3P | |
| J204 | | 1-794-118-11 | JACK BLOCK, PIN 3P (KV-27FV16/29FV16/29FV16C ONLY) | |
| J205 | | 1-794-116-11 | JACK BLOCK, PIN 2P | |
| J206 | | 1-794-117-11 | JACK BLOCK, PIN 3P | |
| J402 | | 1-794-116-11 | JACK BLOCK, PIN 2P | |

## CHIP CONDUCTOR

| | | | | |
|---|---|---|---|---|
| JR001 | | 1-216-295-91 | SHORT | |
| JR002 | | 1-216-295-91 | SHORT | |
| JR402 | | 1-216-295-91 | SHORT | |
| JR403 | | 1-216-295-91 | SHORT | |
| JR405 | | 1-216-295-91 | SHORT (KV-27FV16/29FV16/29FV16C ONLY) | |
| JR411 | | 1-216-295-91 | SHORT | |
| JR471 | | 1-216-295-91 | SHORT (KV-27FV16/29FV16/29FV16C ONLY) | |
| JR502 | | 1-216-295-91 | SHORT | |
| JR503 | | 1-216-295-91 | SHORT | |

A

**Note:**

**The components identified by shading and mark ⚠ are critical for safety. Replace only with part number specified.**

**Note:**

**Les composants identifies per un trame et une marque ⚠ sont critiques pour la securite. Ne les remplacer que par une piece portant le numero specifie.**

| REF.NO. | | PART NO. | DESCRIPTION | REMARK |
|---|---|---|---|---|
| JR505 | | 1-216-295-91 | SHORT | |
| JR522 | | 1-216-295-91 | SHORT | |
| JR523 | | 1-216-295-91 | SHORT | |
| JR526 | | 1-216-295-91 | SHORT | |
| JR527 | | 1-216-295-91 | SHORT | |

**COIL**

| | | | | |
|---|---|---|---|---|
| L101 | | 1-412-029-11 | INDUCTOR CHIP | 10µH |
| L102 | | 1-412-032-11 | INDUCTOR CHIP | 100µH |
| L103 | | 1-412-029-11 | INDUCTOR CHIP | 10µH |
| L503 | | 1-406-677-11 | INDUCTOR | 10mH |
| L506 | | 1-406-677-11 | INDUCTOR | 10mH |
| L604 | | 1-412-525-31 | INDUCTOR | 10µH |
| L505 | | 1-406-978-11 | INDUCTOR | 150µH |
| | | | (KV-27FV16/29FV16/29FV16C ONLY) | |
| L505 | | 1-406-976-11 | INDUCTOR | 68µH |
| | | | (KV-32FS12/32FS16 ONLY) | |
| L510 | ⚠ | 1-412-528-11 | INDUCTOR | 18µH |
| L502 | | 1-412-552-11 | INDUCTOR | 2.2mH |
| L507 | | 1-412-552-11 | INDUCTOR | 2.2mH |
| L603 | | 1-412-529-11 | INDUCTOR | 22µH |
| L605 | | 1-412-529-11 | INDUCTOR | 22µH |
| L504 | | 1-412-533-21 | INDUCTOR | 47µH |
| L501 | | 1-409-955-11 | INDUCTOR | 8mH |

**PHOTO COUPLER**

| | | | |
|---|---|---|---|
| PH601 | ⚠ | 8-749-010-64 | PHOTO COUPLER PC123FY2 |

**IC LINK**

| | | | |
|---|---|---|---|
| PS401 | ⚠ | 1-532-686-21 | LINK, IC 2.7A/150V |
| | | | (KV-27FV16/29FV16/29FV16C ONLY) |
| PS401 | ⚠ | 1-576-336-21 | LINK, IC |
| | | | (KV-32FS12/32FS16 ONLY) |

**TRANSISTOR**

| | | | |
|---|---|---|---|
| Q101 | | 8-729-422-27 | TRANSISTOR 2SD601A-QRS-TX |
| Q201 | | 8-729-216-22 | TRANSISTOR 2SB709A-QRS-TX |
| | | | (KV-27FV16/29FV16/29FV16C ONLY) |
| Q205 | | 8-729-422-27 | TRANSISTOR 2SD601A-QRS-TX |
| | | | (KV-27FV16/29FV16/29FV16C ONLY) |
| Q206 | | 8-729-422-27 | TRANSISTOR 2SD601A-QRS-TX |
| | | | (KV-27FV16/29FV16/29FV16C ONLY) |
| Q401 | | 8-729-216-22 | TRANSISTOR 2SB709A-QRS-TX |
| | | | (KV-27FV16/29FV16/29FV16C ONLY) |
| Q402 | | 8-729-216-22 | TRANSISTOR 2SB709A-QRS-TX |
| | | | (KV-27FV16/29FV16/29FV16C ONLY) |
| Q410 | | 8-729-422-27 | TRANSISTOR 2SD601A-QRS-TX |
| Q411 | | 8-729-216-22 | TRANSISTOR 2SB709A-QRS-TX |
| Q501 | | 8-729-140-50 | TRANSISTOR 2SC3209LK-TP |
| Q502 | ⚠ | 8-729-046-07 | TRANSISTOR 2SD2578-YB |
| | | | (KV-27FV16/29FV16/29FV16C ONLY) |
| Q502 | ⚠ | 8-729-045-26 | TRANSISTOR 2SD2580-YB |
| | | | (KV-32FS12/32FS16 ONLY) |
| Q503 | | 8-729-422-27 | TRANSISTOR 2SD601A-QRS-TX |
| Q504 | | 8-729-809-29 | TRANSISTOR 2SC4159-E |
| Q505 | ⚠ | 8-729-200-17 | TRANSISTOR 2SA1091O-TPE2 |
| Q506 | ⚠ | 8-729-422-27 | TRANSISTOR 2SD601A-QRS-TX |
| Q507 | ⚠ | 8-729-216-22 | TRANSISTOR 2SB709A-QRS-TX |
| Q601 | | 8-729-922-37 | TRANSISTOR 2SD2144S-TP-UVW |
| Q602 | | 8-729-423-33 | TRANSISTOR 2SC3311A-QRSTA |
| Q603 | | 8-729-119-76 | TRANSISTOR 2SA1309A-QRSTA |
| Q604 | | 8-729-422-27 | TRANSISTOR 2SD601A-QRS-TX |
| Q605 | ⚠ | 8-729-046-40 | TRANSISTOR 2SK2663 |
| Q606 | | 8-729-422-27 | TRANSISTOR 2SD601A-QRS-TX |
| Q607 | | 8-729-922-37 | TRANSISTOR 2SD2144S-TP-UVW |
| Q608 | | 8-729-422-27 | TRANSISTOR 2SD601A-QRS-TX |
| Q609 | | 8-729-423-33 | TRANSISTOR 2SC3311A-QRSTA |

**RESISTOR**

| | | | | | |
|---|---|---|---|---|---|
| R105 | 1-216-065-91 | RES-CHIP | 4.7K | 5% | 1/10W |
| R107 | 1-216-025-91 | RES-CHIP | 100 | 5% | 1/10W |
| R108 | 1-216-025-91 | RES-CHIP | 100 | 5% | 1/10W |
| R115 | 1-216-295-91 | SHORT | | | |
| R201 | 1-216-113-00 | RES-CHIP | 470K | 5% | 1/10W |
| R202 | 1-216-113-00 | RES-CHIP | 470K | 5% | 1/10W |
| R204 | 1-216-081-00 | RES-CHIP | 22K | 5% | 1/10W |
| R205 | 1-216-085-00 | RES-CHIP | 33K | 5% | 1/10W |
| R208 | 1-215-924-00 | METAL OXIDE | 15K | 5% | 3W |
| R214 | 1-216-113-00 | RES-CHIP | 470K | 5% | 1/10W |
| R215 | 1-216-113-00 | RES-CHIP | 470K | 5% | 1/10W |
| R218 | 1-216-025-91 | RES-CHIP | 100 | 5% | 1/10W |
| | | (KV-27FV16/29FV16/29FV16C ONLY) | | | |
| R221 | 1-216-033-00 | RES-CHIP | 220 | 5% | 1/10W |
| | | (KV-27FV16/29FV16/29FV16C ONLY) | | | |
| R224 | 1-216-065-91 | RES-CHIP | 4.7K | 5% | 1/10W |
| | | (KV-27FV16/29FV16/29FV16C ONLY) | | | |
| R225 | 1-216-065-91 | RES-CHIP | 4.7K | 5% | 1/10W |
| | | (KV-27FV16/29FV16/29FV16C ONLY) | | | |
| R226 | 1-216-022-00 | RES-CHIP | 75 | 5% | 1/10W |
| | | (KV-27FV16/29FV16/29FV16C ONLY) | | | |
| R227 | 1-216-113-00 | RES-CHIP | 470K | 5% | 1/10W |
| | | (KV-27FV16/29FV16/29FV16C ONLY) | | | |
| R228 | 1-216-113-00 | RES-CHIP | 470K | 5% | 1/10W |
| | | (KV-27FV16/29FV16/29FV16C ONLY) | | | |
| R229 | 1-216-113-00 | RES-CHIP | 470K | 5% | 1/10W |
| | | (KV-27FV16/29FV16/29FV16C ONLY) | | | |

A

**Note:**

**The components identified by shading and mark ⚠ are critical for safety. Replace only with part number specified.**

**Note:**

**Les composants identifies per un trame et une marque ⚠ sont critiques pour la securite. Ne les remplacer que par une piece portant le numero specifie.**

| REF.NO. | | PART NO. | DESCRIPTION | REMARK | | |
|---|---|---|---|---|---|---|
| R231 | | 1-216-069-00 | RES-CHIP | 6.8K | 5% | 1/10W |
| | | | (KV-27FV16/29FV16/29FV16C ONLY) | | | |
| R232 | | 1-216-069-00 | RES-CHIP | 6.8K | 5% | 1/10W |
| | | | (KV-27FV16/29FV16/29FV16C ONLY) | | | |
| R235 | | 1-216-113-00 | RES-CHIP | 470K | 5% | 1/10W |
| | | | (KV-32FS12/32FS16 ONLY) | | | |
| R237 | | 1-216-033-00 | RES-CHIP | 220 | 5% | 1/10W |
| | | | (KV-32FS12/32FS16 ONLY) | | | |
| R238 | | 1-216-033-00 | RES-CHIP | 220 | 5% | 1/10W |
| | | | (KV-32FS12/32FS16 ONLY) | | | |
| R239 | | 1-216-113-00 | RES-CHIP | 470K | 5% | 1/10W |
| | | | (KV-32FS12/32FS16 ONLY) | | | |
| R401 | | 1-216-080-00 | RES-CHIP | 20K | 5% | 1/10W |
| | | | (KV-27FV16/29FV16/29FV16C ONLY) | | | |
| R402 | | 1-216-073-00 | RES-CHIP | 10K | 5% | 1/10W |
| | | | (KV-27FV16/29FV16/29FV16C ONLY) | | | |
| R403 | | 1-216-065-91 | RES-CHIP | 4.7K | 5% | 1/10W |
| | | | (KV-27FV16/29FV16/29FV16C ONLY) | | | |
| R404 | | 1-216-065-91 | RES-CHIP | 4.7K | 5% | 1/10W |
| | | | (KV-27FV16/29FV16/29FV16C ONLY) | | | |
| R407 | | 1-216-025-91 | RES-CHIP | 100 | 5% | 1/10W |
| | | | (KV-27FV16/29FV16/29FV16C ONLY) | | | |
| R408 | | 1-216-025-91 | RES-CHIP | 100 | 5% | 1/10W |
| | | | (KV-27FV16/29FV16/29FV16C ONLY) | | | |
| R411 | | 1-249-417-11 | CARBON | 1K | 5% | 1/4W |
| R412 | | 1-216-113-00 | RES-CHIP | 470K | 5% | 1/10W |
| R413 | | 1-216-113-00 | RES-CHIP | 470K | 5% | 1/10W |
| R414 | | 1-249-417-11 | CARBON | 1K | 5% | 1/4W |
| R421 | | 1-249-425-11 | CARBON | 4.7K | 5% | 1/4W |
| R420 | | 1-208-796-11 | METAL CHIP | 3.9K | 0.50% | 1/10W |
| | | | (KV-32FS12/32FS16 ONLY) | | | |
| R422 | | 1-249-389-11 | CARBON | 4.7 | 5% | 1/4W |
| R426 | | 1-216-009-91 | RES-CHIP | 22 | 5% | 1/10W |
| R429 | | 1-216-113-00 | RES-CHIP | 470K | 5% | 1/10W |
| R430 | | 1-216-049-91 | RES-CHIP | 1K | 5% | 1/10W |
| R431 | | 1-216-049-91 | RES-CHIP | 1K | 5% | 1/10W |
| R433 | | 1-216-113-00 | RES-CHIP | 470K | 5% | 1/10W |
| R436 | | 1-216-065-91 | RES-CHIP | 4.7K | 5% | 1/10W |
| R437 | | 1-216-073-00 | RES-CHIP | 10K | 5% | 1/10W |
| | | | (KV-27FV16/29FV16/29FV16C ONLY) | | | |
| R437 | | 1-216-065-91 | RES-CHIP | 4.7K | 5% | 1/10W |
| | | | (KV-32FS12/32FS16 ONLY) | | | |
| R438 | | 1-216-065-91 | RES-CHIP | 4.7K | 5% | 1/10W |
| R439 | | 1-216-073-00 | RES-CHIP | 10K | 5% | 1/10W |
| | | | (KV-27FV16/29FV16/29FV16C ONLY) | | | |
| R439 | | 1-216-065-91 | RES-CHIP | 4.7K | 5% | 1/10W |
| | | | (KV-32FS12/32FS16 ONLY) | | | |
| R440 | | 1-216-097-91 | RES-CHIP | 100K | 5% | 1/10W |
| R441 | | 1-216-081-00 | RES-CHIP | 22K | 5% | 1/10W |
| R442 | | 1-216-025-91 | RES-CHIP | 100 | 5% | 1/10W |
| R445 | | 1-216-073-00 | RES-CHIP | 10K | 5% | 1/10W |
| R446 | | 1-215-457-00 | METAL | 33K | 1% | 1/4W |
| R447 | | 1-216-065-91 | RES-CHIP | 4.7K | 5% | 1/10W |
| R454 | | 1-216-025-91 | RES-CHIP | 100 | 5% | 1/10W |
| R501 | | 1-249-425-11 | CARBON | 4.7K | 5% | 1/4W |
| R502 | ⚠ | 1-216-455-21 | METAL OXIDE | 560 | 5% | 2W |
| R503 | ⚠ | 1-249-425-11 | CARBON | 4.7K | 5% | 1/4W |
| R505 | | 1-249-401-11 | CARBON | 47 | 5% | 1/4W |
| R506 | ⚠ | 1-215-883-11 | METAL OXIDE | 33 | 5% | 2W |
| R507 | ⚠ | 1-260-328-11 | CARBON | 1K | 5% | 1/2W |
| R508 | | 1-247-863-91 | CARBON | 22K | 5% | 1/4W |
| R509 | ⚠ | 1-215-891-11 | METAL OXIDE | 680 | 5% | 2W |
| R510 | | 1-249-411-11 | CARBON | 330 | 5% | 1/4W |
| R511 | | 1-249-377-11 | CARBON | 0.47 | 5% | 1/4W |
| R512 | | 1-215-910-00 | METAL OXIDE | 68 | 5% | 3W |
| R513 | ⚠ | 1-215-907-11 | METAL OXIDE | 22 | 5% | 3W |
| | | | (KV-27FV16/29FV16/29FV16C ONLY) | | | |
| R513 | ⚠ | 1-215-905-11 | METAL OXIDE | 10 | 5% | 3W |
| | | | (KV-32FS12/32FS16 ONLY) | | | |
| R514 | | 1-216-683-11 | METAL CHIP | 22K | 0.50% | 1/10W |
| | | | (KV-27FV16/29FV16/29FV16C ONLY) | | | |
| R514 | | 1-216-071-00 | RES-CHIP | 8.2K | 5% | 1/10W |
| | | | (KV-32FS12/32FS16 ONLY) | | | |
| R516 | | 1-249-425-11 | CARBON | 4.7K | 5% | 1/4W |
| R517 | | 1-215-445-00 | METAL | 10K | 1% | 1/4W |
| R518 | | 1-249-427-11 | CARBON | 6.8K | 5% | 1/4W |
| | | | (KV-27FV16 ONLY) | | | |
| R518 | | 1-215-439-00 | METAL | 5.6K | 1% | 1/4W |
| | | | (ALL EXCEPT KV-27FV16) | | | |
| R519 | | 1-249-427-11 | CARBON | 6.8K | 5% | 1/4W |
| | | | (KV-27FV16/29FV16/29FV16C ONLY) | | | |
| R519 | | 1-215-439-00 | METAL | 5.6K | 1% | 1/4W |
| | | | (KV-32FS12/32FS16 ONLY) | | | |
| R520 | ⚠ | 1-215-884-11 | METAL OXIDE | 47 | 5% | 2W |
| R521 | | 1-249-413-11 | CARBON | 470 | 5% | 1/4W |
| R522 | | 1-249-417-11 | CARBON | 1K | 5% | 1/4W |
| R523 | | 1-216-073-00 | RES-CHIP | 10K | 5% | 1/10W |
| R524 | | 1-249-429-11 | CARBON | 10K | 5% | 1/4W |
| R525 | ⚠ | 1-208-804-11 | METAL CHIP | 8.2K | 0.50% | 1/10W |
| R526 | | 1-208-814-91 | METAL CHIP | 22K | 0.50% | 1/10W |
| R528 | | 1-215-429-00 | METAL | 2.2K | 1% | 1/4W |
| R529 | | 1-216-109-00 | RES-CHIP | 330K | 5% | 1/10W |
| | | | (KV-27FV16/29FV16/29FV16C ONLY) | | | |
| R529 | | 1-216-107-00 | RES-CHIP | 270K | 5% | 1/10W |
| | | | (KV-32FS12/32FS16 ONLY) | | | |
| R530 | | 1-216-077-91 | RES-CHIP | 15K | 5% | 1/10W |
| | | | (KV-27FV16/29FV16/29FV16C ONLY) | | | |
| R530 | | 1-208-812-11 | METAL CHIP | 18K | 0.50% | 1/10W |
| | | | (KV-32FS12/32FS16 ONLY) | | | |
| R532 | | 1-215-437-00 | METAL | 4.7K | 1% | 1/4W |
| R533 | | 1-215-457-00 | METAL | 33K | 1% | 1/4W |
| | | | (KV-27FV16/29FV16/29FV16C ONLY) | | | |

A

**Note:**

**The components identified by shading and mark ⚠ are critical for safety. Replace only with part number specified.**

**Note:**

**The components identified by ⋈ in this manual have been carefully factory-selected for each set in order to satisfy regulations regarding x-ray radiation. Should replacement be required, replace only with the value originally used.**

| REF.NO. | | PART NO. | DESCRIPTION | REMARK | | |
|---|---|---|---|---|---|---|
| R533 | | 1-215-453-00 | METAL (KV-32FS12/32FS16 ONLY) | 22K | 1% | 1/4W |
| R534 | | 1-215-458-00 | METAL (KV-27FV16/29FV16/29FV16C ONLY) | 36K | 1% | 1/4W |
| R534 | | 1-215-457-00 | METAL (KV-32FS12/32FS16 ONLY) | 33K | 1% | 1/4W |
| R535 | | 1-249-441-11 | CARBON | 100K | 5% | 1/4W |
| R536 | ⚠ | 1-214-798-21 | METAL | 1.8 | 1% | 1/2W |
| R537 | | 1-249-401-11 | CARBON | 47 | 5% | 1/4W |
| R538 | ⚠ | 1-215-889-00 | METAL OXIDE | 330 | 5% | 2W |
| R539 | | 1-249-385-11 | CARBON | 2.2 | 5% | 1/4W |
| R540 | | 1-215-445-00 | METAL | 10K | 1% | 1/4W |
| R541 | | 1-249-429-11 | CARBON | 10K | 5% | 1/4W |
| R543 | | 1-247-887-00 | CARBON | 220K | 5% | 1/4W |
| R544 | | 1-249-377-11 | CARBON | 0.47 | 5% | 1/4W |
| R545 | | 1-215-873-00 | METAL OXIDE | 4.7K | 5% | 1W |
| R546 | ⚠ | 1-249-377-11 | CARBON | 0.47 | 5% | 1/4W |
| R547 | | 1-216-455-21 | METAL OXIDE | 560 | 5% | 2W |
| R548 | | 1-216-377-11 | METAL OXIDE | 4.7 | 5% | 2W |
| R549 | ⚠ | 1-260-288-11 | CARBON | 0.47 | 5% | 1/2W |
| R550 | ⚠ | 1-260-288-11 | CARBON | 0.47 | 5% | 1/2W |
| R551 | | 1-215-907-11 | METAL OXIDE | 22 | 5% | 3W |
| R553 | ⚠ | 1-216-363-00 | METAL OXIDE | 0.33 | 5% | 2W |
| R554 | ⚠ | 1-249-429-11 | CARBON | 10K | 5% | 1/4W |
| R555 | ⚠ | 1-247-895-91 | CARBON | 470K | 5% | 1/4W |
| R556 | ⚠ | 1-249-417-11 | CARBON | 1K | 5% | 1/4W |
| R557 | ⚠ | 1-247-895-91 | CARBON | 470K | 5% | 1/4W |
| R558 | ⚠ | 1-216-097-91 | RES-CHIP | 100K | 5% | 1/10W |
| R559 | ⚠ | 1-216-073-00 | RES-CHIP | 10K | 5% | 1/10W |
| R560 | ⚠ | 1-215-902-11 | METAL OXIDE | 47K | 5% | 1W |
| R561 | ⚠ | 1-249-406-11 | CARBON | 120 | 5% | 1/4W |
| R562 | ⚠ | 1-208-808-11 | METAL CHIP | 12K | 0.50% | 1/10W |
| R563 | ⚠ | 1-247-863-91 | CARBON | 22K | 5% | 1/4W |
| ⋈ R564 | ⚠ | 1-208-836-11 | METAL CHIP (KV-27FV16/29FV16/29FV16C ONLY) | 180K | 0.50% | 1/10W |
| ⋈ R564 | ⚠ | 1-208-824-11 | METAL CHIP (KV-32FS12/32FS16 ONLY) | 56K | 0.50% | 1/10W |
| R565 | ⚠ | 1-249-429-11 | CARBON | 10K | 5% | 1/4W |
| R566 | ⚠ | 1-216-073-00 | RES-CHIP | 10K | 5% | 1/10W |
| R567 | ⚠ | 1-216-073-00 | RES-CHIP | 10K | 5% | 1/10W |
| R568 | ⚠ | 1-215-882-00 | METAL OXIDE | 22 | 5% | 2W |
| R569 | | 1-214-798-21 | METAL | 1.8 | 1% | 1/2W |
| R570 | | 1-247-863-91 | CARBON | 22K | 5% | 1/4W |
| R571 | | 1-216-065-91 | RES-CHIP | 4.7K | 5% | 1/10W |
| R572 | | 1-216-065-91 | RES-CHIP | 4.7K | 5% | 1/10W |
| R601 | ⚠ | 1-219-513-11 | CARBON (ALL EXCEPT KV-29FV16/29FV16C) | 4.7M | 5% | 1/2W |
| R602 | ⚠ | 1-249-389-11 | CARBON | 4.7 | 5% | 1/4W |
| R603 | | 1-215-485-00 | METAL | 470K | 1% | 1/4W |
| R607 | | 1-215-859-00 | METAL OXIDE | 22 | 5% | 1W |
| R608 | | 1-240-205-11 | CARBON | 22M | 5% | 1/2W |
| R609 | | 1-216-049-91 | RES-CHIP | 1K | 5% | 1/10W |
| R610 | | 1-216-073-00 | RES-CHIP | 10K | 5% | 1/10W |
| R611 | | 1-216-089-91 | RES-CHIP | 47K | 5% | 1/10W |
| R612 | | 1-216-045-00 | RES-CHIP | 680 | 5% | 1/10W |
| R613 | ⚠ | 1-219-512-11 | CARBON | 2.2M | 5% | 1/2W |
| R614 | | 1-249-413-11 | CARBON | 470 | 5% | 1/4W |
| R615 | ⚠ | 1-218-265-11 | METAL (KV-29FV16/29FV16C ONLY) | 8.2M | 5% | 1W |
| R616 | ⚠ | 1-260-302-51 | CARBON | 6.8 | 5% | 1/2W |
| R617 | | 1-216-009-91 | RES-CHIP | 22 | 5% | 1/10W |
| R618 | | 1-249-440-11 | CARBON | 82K | 5% | 1/4W |
| R619 | | 1-249-437-11 | CARBON | 47K | 5% | 1/4W |
| R620 | | 1-249-417-11 | CARBON | 1K | 5% | 1/4W |
| R621 | ⚠ | 1-240-251-11 | CEMENTED | 6.8 | 5% | 10W |
| R622 | | 1-249-441-11 | CARBON | 100K | 5% | 1/4W |
| R623 | ⚠ | 1-260-324-11 | CARBON | 470 | 5% | 1/2W |
| R624 | ⚠ | 1-249-429-11 | CARBON | 10K | 5% | 1/4W |
| R625 | | 1-249-437-11 | CARBON | 47K | 5% | 1/4W |
| R626 | ⚠ | 1-220-926-11 | FUSIBLE | 0.47 | 10% | 1/2W |
| R627 | | 1-215-479-00 | METAL (KV-29FV16/29FV16C ONLY) | 270K | 1% | 1/4W |
| R627 | | 1-215-483-00 | METAL (ALL EXCEPT KV-29FV16/29FV16C) | 390K | 1% | 1/4W |
| R628 | | 1-215-479-00 | METAL (ALL EXCEPT KV-27FV16) | 270K | 1% | 1/4W |
| R630 | | 1-249-421-11 | CARBON | 2.2K | 5% | 1/4W |
| R631 | | 1-215-929-11 | METAL OXIDE (KV-29FV16/29FV16C ONLY) | 100K | 5% | 3W |
| R632 | ⚠ | 1-217-611-00 | METAL | 0.1 | 10% | 2W |
| R633 | | 1-249-415-11 | CARBON | 680 | 5% | 1/4W |
| R634 | | 1-216-073-00 | RES-CHIP | 10K | 5% | 1/10W |
| R635 | | 1-216-057-00 | RES-CHIP | 2.2K | 5% | 1/10W |
| R637 | ⚠ | 1-216-485-11 | METAL OXIDE (KV-29FV16/29FV16C ONLY) | 5.6K | 5% | 3W |
| R638 | | 1-249-402-11 | CARBON (KV-29FV16/29FV16C ONLY) | 56 | 5% | 1/4W |
| R638 | | 1-249-399-11 | CARBON (ALL EXCEPT KV-29FV16/29FV16C) | 33 | 5% | 1/4W |
| R639 | | 1-249-421-11 | CARBON | 2.2K | 5% | 1/4W |
| R640 | | 1-249-417-11 | CARBON | 1K | 5% | 1/4W |
| R641 | ⚠ | 1-216-369-00 | METAL OXIDE | 1 | 5% | 2W |
| R642 | | 1-216-089-91 | RES-CHIP | 47K | 5% | 1/10W |
| R643 | | 1-249-419-11 | CARBON | 1.5K | 5% | 1/4W |
| R644 | | 1-247-843-11 | CARBON | 3.3K | 5% | 1/4W |
| R645 | | 1-215-898-11 | METAL OXIDE | 10K | 5% | 2W |
| R646 | | 1-249-418-11 | CARBON (KV-29FV16/29FV16C ONLY) | 1.2K | 5% | 1/4W |
| R646 | | 1-249-419-11 | CARBON (ALL EXCEPT KV-29FV16/29FV16C) | 1.5K | 5% | 1/4W |

A BC

**Note:**

**The components identified by shading and mark ⚠ are critical for safety. Replace only with part number specified.**

**Note:**

**Les composants identifies per un trame et une marque ⚠ sont critiques pour la securite. Ne les remplacer que par une piece portant le numero specifie.**

| REF.NO. | | PART NO. | DESCRIPTION | | | REMARK |
|---|---|---|---|---|---|---|
| R648 | | 1-216-397-11 | METAL OXIDE (KV-27FV16/29FV16/29FV16C ONLY) | 4.7 | 5% | 3W |
| R648 | | 1-215-908-00 | METAL OXIDE (KV-32FS12/32FS16 ONLY) | 33 | 5% | 3W |
| R649 | | 1-249-417-11 | CARBON | 1K | 5% | 1/4W |
| R650 | | 1-216-387-11 | METAL OXIDE | 0.68 | 5% | 3W |
| R651 | | 1-249-429-11 | CARBON | 10K | 5% | 1/4W |
| R653 | | 1-216-049-91 | RES-CHIP | 1K | 5% | 1/10W |
| R655 | | 1-216-049-91 | RES-CHIP | 1K | 5% | 1/10W |
| R656 | | 1-249-429-11 | CARBON | 10K | 5% | 1/4W |
| R658 | | 1-216-387-11 | METAL OXIDE | 0.68 | 5% | 3W |
| R659 | | 1-215-857-11 | METAL OXIDE | 10 | 5% | 1W |
| R660 | ⚠ | 1-216-485-11 | METAL OXIDE (KV-29FV16/29FV16C ONLY) | 5.6K | 5% | 3W |
| R660 | ⚠ | 1-215-924-00 | METAL OXIDE (ALL EXCEPT KV-29FV16/29FV16C) | 15K | 5% | 3W |
| R661 | | 1-216-057-00 | RES-CHIP | 2.2K | 5% | 1/10W |
| R662 | ⚠ | 1-216-485-11 | METAL OXIDE (KV-29FV16/29FV16C ONLY) | 5.6K | 5% | 3W |
| R663 | | 1-216-081-00 | RES-CHIP | 22K | 5% | 1/10W |
| R664 | | 1-216-397-11 | METAL OXIDE (KV-27FV16/29FV16/29FV16C ONLY) | 4.7 | 5% | 3W |
| R2001 | | 1-216-057-00 | RES-CHIP (KV-32FS12/32FS16 ONLY) | 2.2K | 5% | 1/10W |
| R2002 | | 1-216-053-00 | RES-CHIP (KV-32FS12/32FS16 ONLY) | 1.5K | 5% | 1/10W |
| R2003 | | 1-249-425-11 | CARBON | 4.7K | 5% | 1/4W |
| R2004 | | 1-216-069-00 | RES-CHIP (KV-32FS12/32FS16 ONLY) | 6.8K | 5% | 1/10W |
| R2005 | | 1-216-295-91 | SHORT (KV-32FS12/32FS16 ONLY) | | | |

**RELAY**

| | | | |
|---|---|---|---|
| RY601 | ⚠ | 1-755-198-11 | RELAY |
| RY602 | ⚠ | 1-755-266-11 | RELAY, AC POWER |

**SWITCH**

| | | | |
|---|---|---|---|
| S2007 | | 1-762-816-11 | SWITCH, TACTILE (KV-32FS12/32FS16 ONLY) |
| S2008 | | 1-762-816-11 | SWITCH, TACTILE (KV-32FS12/32FS16 ONLY) |

**SWITCH**

| | | | |
|---|---|---|---|
| SW501 | | 1-572-707-11 | SWITCH, LEVER |
| SW502 | | 1-572-707-11 | SWITCH, LEVER |

**TRANSFORMER**

| | | | |
|---|---|---|---|
| T501 | ⚠ | 1-437-195-11 | TRANSFORMER, HORIZONTAL DRIVE |
| T503 | ⚠ | 1-426-981-11 | TRANSFORMER, FERRITE (PMT) |
| T504 | ⚠ | 1-431-693-11 | TRANSFORMER, HORIZONTAL LINEAR (KV-27FV16/29FV16/29FV16C ONLY) |
| T504 | ⚠ | 1-435-098-11 | TRANSFORMER, HORIZONTAL LINEAR (KV-32FS12/32FS16 ONLY) |
| T505 | ⚠ | 1-453-310-11 | FBT ASSY NX-4521//X4J4 (KV-27FV16/29FV16/29FV16C ONLY) |
| T505 | ⚠ | 1-453-338-11 | FBT ASSY, NX-4600//X4J4 (KV-32FS12/32FS16 ONLY) |
| T602 | ⚠ | 1-426-717-11 | TRANSFORMER, LINE FILTER (LFT) (KV-29FV16/29FV16C ONLY) |
| T602 | ⚠ | 1-435-617-11 | TRANSFORMER, LINE FILTER (ALL EXCEPT KV-29FV16/29FV16C) |
| T603 | ⚠ | 1-435-402-11 | TRANSFORMER, CONVERTER (SRT) (KV-29FV16/29FV16C ONLY) |
| T603 | ⚠ | 1-435-403-11 | TRANSFORMER, CONVERTER (S.R.T) (ALL EXCEPT KV-29FV16/29FV16C) |
| T604 | ⚠ | 1-431-852-11 | TRANSFORMER, CONVERTER (SRT) |

**THERMISTOR**

| | | | |
|---|---|---|---|
| TH501 | | 1-800-193-00 | THERMISTOR |
| TH601 | ⚠ | 1-803-586-11 | THERMISTOR, NTC |

**THERMISTOR**

| | | | |
|---|---|---|---|
| THP601 | ⚠ | 1-803-540-11 | THERMISTOR |

**TUNER**

| | | | |
|---|---|---|---|
| TU101 | ⚠ | 8-598-431-30 | TUNER, FSS BTF-WA411 |

**VARISTOR**

| | | | |
|---|---|---|---|
| VDR601 | ⚠ | 1-803-967-11 | VARISTOR (ENE621D-14A) (KV-29FV16/29FV16C ONLY) |
| VDR601 | ⚠ | 1-803-585-11 | VARISTOR ENE271D-10A (ALL EXCEPT KV-29FV16/29FV16C) |

BC

| | | |
|---|---|---|
| * | A-1131-593-A | BC MOUNTED PC BOARD (ALL EXCEPT KV-32FS12/32FS16) |

**CAPACITOR**

| | | | | | |
|---|---|---|---|---|---|
| C3500 | 1-165-319-11 | CERAMIC CHIP | 0.1µF | | 50V |
| C3501 | 1-163-231-11 | CERAMIC CHIP | 15PF | 5% | 50V |
| C3502 | 1-165-319-11 | CERAMIC CHIP | 0.1µF | | 50V |

BC

**Note:**

**The components identified by shading and mark ⚠ are critical for safety. Replace only with part number specified.**

**Note:**

**Les composants identifies per un trame et une marque ⚠ sont critiques pour la securite. Ne les remplacer que par une piece portant le numero specifie.**

| REF.NO. | PART NO. | DESCRIPTION | REMARK | | |
|---|---|---|---|---|---|
| C3504 | 1-163-102-00 | CERAMIC CHIP | 24PF | 5% | 50V |
| C3505 | 1-163-102-00 | CERAMIC CHIP | 24PF | 5% | 50V |
| C3506 | 1-165-319-11 | CERAMIC CHIP | 0.1µF | | 50V |
| C3507 | 1-165-319-11 | CERAMIC CHIP | 0.1µF | | 50V |
| C3509 | 1-163-038-91 | CERAMIC CHIP | 0.1µF | | 25V |
| C3510 | 1-163-131-00 | CERAMIC CHIP | 390PF | 5% | 50V |
| C3511 | 1-163-038-91 | CERAMIC CHIP | 0.1µF | | 25V |
| C3512 | 1-165-319-11 | CERAMIC CHIP | 0.1µF | | 50V |
| C3513 | 1-216-295-91 | SHORT | | | |
| C3514 | 1-163-031-11 | CERAMIC CHIP | 0.01µF | | 50V |
| C3515 | 1-165-319-11 | CERAMIC CHIP | 0.1µF | | 50V |
| C3516 | 1-165-319-11 | CERAMIC CHIP | 0.1µF | | 50V |
| C3517 | 1-126-924-11 | ELECT | 330µF | 20% | 6.3V |
| C3518 | 1-163-038-91 | CERAMIC CHIP | 0.1µF | | 25V |
| C3519 | 1-165-319-11 | CERAMIC CHIP | 0.1µF | | 50V |
| C3520 | 1-165-319-11 | CERAMIC CHIP | 0.1µF | | 50V |
| C3521 | 1-163-237-11 | CERAMIC CHIP | 27PF | 5% | 50V |
| C3522 | 1-104-664-11 | ELECT | 47µF | 20% | 16V |
| C3523 | 1-165-319-11 | CERAMIC CHIP | 0.1µF | | 50V |
| C3524 | 1-165-319-11 | CERAMIC CHIP | 0.1µF | | 50V |
| C3525 | 1-163-038-91 | CERAMIC CHIP | 0.1µF | | 25V |
| C3526 | 1-165-319-11 | CERAMIC CHIP | 0.1µF | | 50V |
| C3527 | 1-165-319-11 | CERAMIC CHIP | 0.1µF | | 50V |
| C3528 | 1-165-319-11 | CERAMIC CHIP | 0.1µF | | 50V |
| C3529 | 1-165-319-11 | CERAMIC CHIP | 0.1µF | | 50V |
| C3530 | 1-104-664-11 | ELECT | 47µF | 20% | 16V |
| C3531 | 1-165-319-11 | CERAMIC CHIP | 0.1µF | | 50V |
| C3532 | 1-126-964-11 | ELECT | 10µF | 20% | 50V |
| C3533 | 1-163-133-00 | CERAMIC CHIP | 470PF | 5% | 50V |
| C3534 | 1-126-960-11 | ELECT | 1µF | 20% | 50V |
| C3535 | 1-163-231-11 | CERAMIC CHIP | 15PF | 5% | 50V |
| C3536 | 1-126-960-11 | ELECT | 1µF | 20% | 50V |
| C3539 | 1-163-231-11 | CERAMIC CHIP | 15PF | 5% | 50V |
| C3541 | 1-163-106-00 | CERAMIC CHIP | 36PF | 5% | 50V |
| C3542 | 1-126-964-11 | ELECT | 10µF | 20% | 50V |
| C3543 | 1-164-505-11 | CERAMIC CHIP | 2.2µF | | 16V |
| C3546 | 1-163-231-11 | CERAMIC CHIP | 15PF | 5% | 50V |
| C3547 | 1-104-664-11 | ELECT | 47µF | 20% | 16V |
| C3548 | 1-165-319-11 | CERAMIC CHIP | 0.1µF | | 50V |
| C3549 | 1-104-664-11 | ELECT | 47µF | 20% | 16V |
| C3550 | 1-163-031-11 | CERAMIC CHIP | 0.01µF | | 50V |
| C3551 | 1-104-664-11 | ELECT | 47µF | 20% | 16V |
| C3552 | 1-163-031-11 | CERAMIC CHIP | 0.01µF | | 50V |
| C3553 | 1-163-031-11 | CERAMIC CHIP | 0.01µF | | 50V |
| C3554 | 1-104-664-11 | ELECT | 47µF | 20% | 16V |
| C3555 | 1-104-664-11 | ELECT | 47µF | 20% | 16V |
| C3556 | 1-165-319-11 | CERAMIC CHIP | 0.1µF | | 50V |
| C3557 | 1-163-031-11 | CERAMIC CHIP | 0.01µF | | 50V |
| C3558 | 1-104-664-11 | ELECT | 47µF | 20% | 16V |
| C3559 | 1-163-031-11 | CERAMIC CHIP | 0.01µF | | 50V |
| C3560 | 1-104-664-11 | ELECT | 47µF | 20% | 16V |
| C3561 | 1-163-031-11 | CERAMIC CHIP | 0.01µF | | 50V |
| C3562 | 1-163-031-11 | CERAMIC CHIP | 0.01µF | | 50V |
| C3563 | 1-104-664-11 | ELECT | 47µF | 20% | 16V |
| C3564 | 1-104-664-11 | ELECT | 47µF | 20% | 16V |
| C3565 | 1-163-031-11 | CERAMIC CHIP | 0.01µF | | 50V |
| C3566 | 1-163-031-11 | CERAMIC CHIP | 0.01µF | | 50V |

## CONNECTOR

| | | | |
|---|---|---|---|
| CN3500* | 1-691-632-21 | CONNECTOR, BOARD TO BOARD 15P | |

## FERRITE BEAD

| | | | |
|---|---|---|---|
| FB3500 | 1-414-234-22 | INDUCTOR CHIP | 0µH |
| FB3501 | 1-414-234-22 | INDUCTOR CHIP | 0µH |
| FB3502 | 1-414-234-22 | INDUCTOR CHIP | 0µH |
| FB3503 | 1-414-234-22 | INDUCTOR CHIP | 0µH |
| FB3504 | 1-414-234-22 | INDUCTOR CHIP | 0µH |
| FB3505 | 1-414-234-22 | INDUCTOR CHIP | 0µH |
| FB3506 | 1-414-234-22 | INDUCTOR CHIP | 0µH |
| FB3507 | 1-414-234-22 | INDUCTOR CHIP | 0µH |
| FB3508 | 1-414-234-22 | INDUCTOR CHIP | 0µH |

## FILTER

| | | | |
|---|---|---|---|
| FL3500 | 1-239-848-21 | FILTER, LOW PASS | |
| FL3502 | 1-239-848-21 | FILTER, LOW PASS | |
| FL3503 | 1-239-848-21 | FILTER, LOW PASS | |
| FL3504 | 1-233-512-21 | FERRITE | 37µH |
| FL3505 | 1-233-512-21 | FERRITE | 37µH |
| FL3506 | 1-233-512-21 | FERRITE | 37µH |

## IC

| | | |
|---|---|---|
| IC3500 | 8-759-568-27 | IC UPD424210LE-60-E2 |
| IC3501 | 8-759-594-44 | IC UPD64082GF-3BA |
| IC3502 | 8-759-583-47 | IC UPC2933T-E1 |

## COIL

| | | | |
|---|---|---|---|
| L3500 | 1-412-028-11 | INDUCTOR CHIP | 4.7µH |
| L3501 | 1-414-267-11 | INDUCTOR | 10µH |
| L3502 | 1-414-267-11 | INDUCTOR | 10µH |
| L3503 | 1-414-267-11 | INDUCTOR | 10µH |
| L3504 | 1-414-267-11 | INDUCTOR | 10µH |
| L3505 | 1-414-267-11 | INDUCTOR | 10µH |

BC

**Note:**

**The components identified by shading and mark ⚠ are critical for safety. Replace only with part number specified.**

**Note:**

**Les composants identifies per un trame et une marque ⚠ sont critiques pour la securite. Ne les remplacer que par une piece portant le numero specifie.**

## TRANSISTOR

| REF.NO. | PART NO. | DESCRIPTION |
|---|---|---|
| Q3500 | 8-729-216-22 | TRANSISTOR 2SB709A-QRS-TX |
| Q3501 | 8-729-422-27 | TRANSISTOR 2SD601A-QRS-TX |
| Q3502 | 8-729-216-22 | TRANSISTOR 2SB709A-QRS-TX |
| Q3503 | 8-729-422-27 | TRANSISTOR 2SD601A-QRS-TX |
| Q3504 | 8-729-216-22 | TRANSISTOR 2SB709A-QRS-TX |
| Q3505 | 8-729-422-27 | TRANSISTOR 2SD601A-QRS-TX |
| Q3506 | 8-729-422-27 | TRANSISTOR 2SD601A-QRS-TX |
| Q3510 | 8-729-216-22 | TRANSISTOR 2SB709A-QRS-TX |
| Q3511 | 8-729-422-27 | TRANSISTOR 2SD601A-QRS-TX |
| Q3512 | 8-729-422-27 | TRANSISTOR 2SD601A-QRS-TX |
| Q3513 | 8-729-422-27 | TRANSISTOR 2SD601A-QRS-TX |
| Q3514 | 8-729-216-22 | TRANSISTOR 2SB709A-QRS-TX |
| Q3515 | 8-729-422-27 | TRANSISTOR 2SD601A-QRS-TX |
| Q3516 | 8-729-422-27 | TRANSISTOR 2SD601A-QRS-TX |
| Q3517 | 8-729-422-27 | TRANSISTOR 2SD601A-QRS-TX |

## RESISTOR

| REF.NO. | PART NO. | DESCRIPTION | REMARK | | |
|---|---|---|---|---|---|
| R3500 | 1-216-296-91 | SHORT | | | |
| R3501 | 1-216-296-91 | SHORT | | | |
| R3502 | 1-216-296-91 | SHORT | | | |
| R3503 | 1-216-017-91 | RES-CHIP | 47 | 5% | 1/10W |
| R3504 | 1-216-295-91 | SHORT | | | |
| R3505 | 1-216-295-91 | SHORT | | | |
| R3506 | 1-216-295-91 | SHORT | | | |
| R3507 | 1-216-295-91 | SHORT | | | |
| R3508 | 1-216-295-91 | SHORT | | | |
| R3509 | 1-216-049-91 | RES-CHIP | 1K | 5% | 1/10W |
| R3510 | 1-216-041-00 | RES-CHIP | 470 | 5% | 1/10W |
| R3511 | 1-216-041-00 | RES-CHIP | 470 | 5% | 1/10W |
| R3512 | 1-216-295-91 | SHORT | | | |
| R3514 | 1-216-025-91 | RES-CHIP | 100 | 5% | 1/10W |
| R3515 | 1-216-055-00 | RES-CHIP | 1.8K | 5% | 1/10W |
| R3516 | 1-216-055-00 | RES-CHIP | 1.8K | 5% | 1/10W |
| R3517 | 1-216-025-91 | RES-CHIP | 100 | 5% | 1/10W |
| R3518 | 1-216-025-91 | RES-CHIP | 100 | 5% | 1/10W |
| R3519 | 1-216-295-91 | SHORT | | | |
| R3520 | 1-216-065-91 | RES-CHIP | 4.7K | 5% | 1/10W |
| R3521 | 1-216-041-00 | RES-CHIP | 470 | 5% | 1/10W |
| R3522 | 1-216-041-00 | RES-CHIP | 470 | 5% | 1/10W |
| R3523 | 1-216-049-91 | RES-CHIP | 1K | 5% | 1/10W |
| R3524 | 1-216-089-91 | RES-CHIP | 47K | 5% | 1/10W |
| R3525 | 1-216-057-00 | RES-CHIP | 2.2K | 5% | 1/10W |
| R3526 | 1-216-105-91 | RES-CHIP | 220K | 5% | 1/10W |
| R3527 | 1-216-033-00 | RES-CHIP | 220 | 5% | 1/10W |
| R3528 | 1-216-645-11 | METAL CHIP | 560 | 0.50% | 1/10W |
| R3529 | 1-216-641-11 | METAL CHIP | 390 | 0.50% | 1/10W |
| R3530 | 1-216-067-00 | RES-CHIP | 5.6K | 5% | 1/10W |
| R3531 | 1-216-049-91 | RES-CHIP | 1K | 5% | 1/10W |
| R3532 | 1-216-025-91 | RES-CHIP | 100 | 5% | 1/10W |
| R3534 | 1-216-049-91 | RES-CHIP | 1K | 5% | 1/10W |
| R3535 | 1-216-025-91 | RES-CHIP | 100 | 5% | 1/10W |
| R3544 | 1-216-049-91 | RES-CHIP | 1K | 5% | 1/10W |
| R3545 | 1-216-043-91 | RES-CHIP | 560 | 5% | 1/10W |
| R3547 | 1-216-067-00 | RES-CHIP | 5.6K | 5% | 1/10W |
| R3548 | 1-216-295-91 | SHORT | | | |
| R3549 | 1-216-057-00 | RES-CHIP | 2.2K | 5% | 1/10W |
| R3550 | 1-216-649-11 | METAL CHIP | 820 | 0.50% | 1/10W |
| R3551 | 1-208-776-11 | METAL CHIP | 560 | 0.50% | 1/10W |
| R3552 | 1-208-764-11 | METAL CHIP | 180 | 0.50% | 1/10W |
| R3553 | 1-216-057-00 | RES-CHIP | 2.2K | 5% | 1/10W |
| R3554 | 1-216-047-91 | RES-CHIP | 820 | 5% | 1/10W |
| R3555 | 1-216-075-00 | RES-CHIP | 12K | 5% | 1/10W |
| R3556 | 1-216-085-00 | RES-CHIP | 33K | 5% | 1/10W |
| R3557 | 1-216-049-91 | RES-CHIP | 1K | 5% | 1/10W |
| R3558 | 1-216-017-91 | RES-CHIP | 47 | 5% | 1/10W |
| R3559 | 1-216-295-91 | SHORT | | | |
| R3560 | 1-216-049-91 | RES-CHIP | 1K | 5% | 1/10W |
| R3561 | 1-216-043-91 | RES-CHIP | 560 | 5% | 1/10W |
| R3563 | 1-216-295-91 | SHORT | | | |
| R3564 | 1-216-295-91 | SHORT | | | |
| R3565 | 1-216-067-00 | RES-CHIP | 5.6K | 5% | 1/10W |
| R3566 | 1-216-057-00 | RES-CHIP | 2.2K | 5% | 1/10W |
| R3567 | 1-216-043-91 | RES-CHIP | 560 | 5% | 1/10W |
| R3568 | 1-216-047-91 | RES-CHIP | 820 | 5% | 1/10W |
| R3569 | 1-216-057-00 | RES-CHIP | 2.2K | 5% | 1/10W |
| R3570 | 1-216-085-00 | RES-CHIP | 33K | 5% | 1/10W |
| R3571 | 1-216-075-00 | RES-CHIP | 12K | 5% | 1/10W |
| R3572 | 1-216-049-91 | RES-CHIP | 1K | 5% | 1/10W |
| R3573 | 1-216-017-91 | RES-CHIP | 47 | 5% | 1/10W |
| R3588 | 1-216-043-91 | RES-CHIP | 560 | 5% | 1/10W |

## CRYSTAL

| REF.NO. | PART NO. | DESCRIPTION |
|---|---|---|
| X3500 | 1-767-606-11 | VIBRATOR, CRYSTAL |

# CA D

**Note:**

**The components identified by shading and mark ⚠ are critical for safety. Replace only with part number specified.**

**Note:**

**Les composants identifies per un trame et une marque ⚠ sont critiques pour la securite. Ne les remplacer que par une piece portant le numero specifie.**

| REF.NO. | PART NO. | DESCRIPTION | REMARK |
|---|---|---|---|

## CA

| | | | |
|---|---|---|---|
| * | A-1332-063-A | CA (VAR) MOUNTED PC BOARD (KV-27FV16/29FV16/29FV16C ONLY) | |
| * | A-1332-061-A | CA (VAR) MOUNTED PC BOARD (KV-32FS12/32FS16 ONLY) | |
| | 4-382-854-11 | SCREW (M3X10), P, SW (+) | |

### CAPACITOR

| | | | | | |
|---|---|---|---|---|---|
| C701 | 1-104-664-11 | ELECT | 47µF | 20% | 25V |
| C702 | 1-136-165-00 | MYLAR | 0.1µF | 5% | 50V |
| C703 | 1-104-664-11 | ELECT | 47µF | 20% | 25V |
| C704 | 1-107-651-11 | ELECT | 4.7µF | 20% | 250V |
| C705 | 1-107-652-11 | ELECT | 10µF | 20% | 250V |
| C707 | 1-162-114-00 | CERAMIC | 0.0047µF | | 2KV |
| C708 | 1-136-165-00 | MYLAR | 0.1µF | 5% | 50V |
| C709 | 1-126-934-11 | ELECT | 220µF | 20% | 16V |
| C710 | 1-126-964-11 | ELECT | 10µF | 20% | 50V |

### CONNECTOR

| | | | |
|---|---|---|---|
| CN701 * | 1-564-506-11 | PLUG, CONNECTOR 3P | |
| CN702 | 1-695-915-11 | TAB (CONTACT) | |
| CN704 | 1-784-281-11 | HOUSING, CONNECTOR 1P | |
| CN706 * | 1-564-509-11 | PLUG, CONNECTOR 6P | |

### DIODE

| | | |
|---|---|---|
| D701 | 8-719-901-83 | DIODE 1SS83TD |
| D702 | 8-719-901-83 | DIODE 1SS83TD |
| D703 | 8-719-901-83 | DIODE 1SS83TD |
| D704 | 8-719-302-43 | DIODE RGP10GPKG23 |

### IC

| | | |
|---|---|---|
| IC701 | 8-759-803-42 | IC LA6500-FA |
| IC702 | 8-759-562-43 | IC TDA6108JF/N1B |

### JACK

| | | |
|---|---|---|
| J701 | 1-451-470-21 | SOCKET, CRT |

### COIL

| | | | |
|---|---|---|---|
| L701 | 1-408-613-31 | INDUCTOR | 68µH |

### TRANSISTOR

| | | |
|---|---|---|
| Q700 | 8-729-423-33 | TRANSISTOR 2SC3311A-QRSTA |
| Q701 | 8-729-423-33 | TRANSISTOR 2SC3311A-QRSTA |

### RESISTOR

| | | | | | |
|---|---|---|---|---|---|
| R706 | 1-249-381-11 | CARBON | 1 | 5% | 1/4W |
| R707 | 1-249-383-11 | CARBON | 1.5 | 5% | 1/4W |
| R703 | 1-247-807-31 | CARBON | 100 | 5% | 1/4W |
| R708 | 1-247-807-31 | CARBON | 100 | 5% | 1/4W |
| R709 | 1-247-807-31 | CARBON | 100 | 5% | 1/4W |
| R710 | 1-247-807-31 | CARBON | 100 | 5% | 1/4W |
| R714 | 1-260-087-11 | CARBON | 100 | 5% | 1/2W |
| R702 | 1-247-815-91 | CARBON | 220 | 5% | 1/4W |
| R716 | 1-260-123-11 | CARBON | 100K | 5% | 1/2W |
| R701 | 1-249-429-11 | CARBON | 10K | 5% | 1/4W |
| R705 | 1-249-429-11 | CARBON | 10K | 5% | 1/4W |
| R711 | 1-260-099-11 | CARBON | 1K | 5% | 1/2W |
| R712 | 1-260-099-11 | CARBON | 1K | 5% | 1/2W |
| R713 | 1-260-099-11 | CARBON | 1K | 5% | 1/2W |
| R704 | 1-249-421-11 | CARBON | 2.2K | 5% | 1/4W |
| R720 | 1-249-421-11 | CARBON | 2.2K | 5% | 1/4W |
| R721 | 1-249-421-11 | CARBON | 2.2K | 5% | 1/4W |
| R700 | 1-247-863-91 | CARBON | 22K | 5% | 1/4W |
| R715 | 1-260-132-11 | CARBON | 560K | 5% | 1/2W |
| R717 | 1-216-373-11 | METAL OXIDE (KV-27FV16/29FV16/29FV16C ONLY) | 2.2 | 5% | 2W |
| R718 | 1-216-375-00 | METAL OXIDE (KV-32FS12/32FS16 ONLY) | 3.3 | 5% | 2W |
| R719 | 1-215-888-00 | METAL OXIDE | 220 | 5% | 2W |

### VARIABLE RESISTOR

| | | |
|---|---|---|
| RV701 | 1-241-656-11 | RES, ADJ, METAL FILM 110M |

## D

| | | | |
|---|---|---|---|
| * | A-1343-875-A | D (VAR) MOUNTED PC BOARD (KV-27FV16/29FV16/29FV16C ONLY) | |
| * | A-1343-874-A | D (VAR) MOUNTED PC BOARD (KV-32FS12/32FS16 ONLY) | |

### CAPACITOR

| | | | | | |
|---|---|---|---|---|---|
| C801 | 1-126-960-11 | ELECT | 1µF | 20% | 50V |
| C802 | 1-126-964-11 | ELECT | 10µF | 20% | 50V |
| C803 | 1-136-191-11 | MYLAR | 0.22µF | 5% | 63V |
| C804 | 1-136-191-11 | MYLAR | 0.22µF | 5% | 63V |

D

**Note:**

**The components identified by shading and mark ⚠ are critical for safety. Replace only with part number specified.**

**Note:**

**Les composants identifies per un trame et une marque ⚠ sont critiques pour la securite. Ne les remplacer que par une piece portant le numero specifie.**

| REF.NO. | PART NO. | DESCRIPTION | REMARK | | |
|---|---|---|---|---|---|
| C807 | 1-163-021-91 | CERAMIC CHIP | 0.01µF | 10% | 50V |
| C808 | 1-163-021-91 | CERAMIC CHIP | 0.01µF | 10% | 50V |
| C809 | 1-110-501-11 | CERAMIC CHIP | 0.33µF | 10% | 16V |
| C810 | 1-130-495-00 | MYLAR | 0.1µF | 5% | 50V |
| C812 | 1-163-021-91 | CERAMIC CHIP | 0.01µF | 10% | 50V |
| C814 | 1-163-021-91 | CERAMIC CHIP | 0.01µF | 10% | 50V |
| C815 | 1-129-718-00 | FILM | 0.022µF | 5% | 630V |
| C816 | 1-102-244-00 | CERAMIC | 220PF | 10% | 500V |
| C817 | 1-136-558-11 | FILM (KV-27FV16/29FV16/29FV16C ONLY) | 0.0039µF | 5% | 630V |
| C817 | 1-129-928-00 | FILM (KV-32FS12/32FS16 ONLY) | 0.0027µF | 10% | 630V |
| C818 | 1-164-735-51 | CERAMIC (KV-27FV16/29FV16/29FV16C ONLY) | 0.0015µF | 10% | 500V |
| C818 | 1-164-625-11 | CERAMIC (KV-32FS12/32FS16 ONLY) | 680PF | 10% | 500V |
| C820 | 1-109-954-11 | ELECT | 0.47µF | 20% | 160V |
| C821 | 1-163-021-91 | CERAMIC CHIP | 0.01µF | 10% | 50V |
| C823 | 1-130-967-00 | FILM | 0.0027µF | 5% | 50V |
| C824 | 1-104-760-11 | CERAMIC CHIP | 0.047µF | 10% | 50V |
| C825 | 1-137-150-11 | MYLAR | 0.01µF | 5% | 50V |
| C826 | 1-163-251-11 | CERAMIC CHIP | 100PF | 5% | 50V |
| C862 | 1-126-964-11 | ELECT | 10µF | 20% | 50V |

**CONNECTOR**

| | | |
|---|---|---|
| CN800 * | 1-564-510-11 | PLUG, CONNECTOR 7P |
| CN801 * | 1-564-507-11 | PLUG, CONNECTOR 4P |
| CN802 * | 1-508-784-21 | PIN, CONNECTOR (5MM PITCH) 1P |

**DIODE**

| | | |
|---|---|---|
| D801 | 8-719-109-89 | DIODE MTZJ-T-77-5.6C |
| D802 | 8-719-991-33 | DIODE 1SS133T-77 |
| D808 | 8-719-991-33 | DIODE 1SS133T-77 |
| D809 | 8-719-110-41 | DIODE MTZJ-T-77-15B |
| D810 | 8-719-970-87 | DIODE ERA38-06TP1 |
| D811 | 8-719-970-87 | DIODE ERA38-06TP1 |
| D812 | 8-719-300-33 | DIODE ERB44-06TP1 |
| D813 | 8-719-991-33 | DIODE 1SS133T-77 |
| D814 | 8-719-991-33 | DIODE 1SS133T-77 |

**IC**

| | | |
|---|---|---|
| IC801 | 8-759-700-42 | IC NJM2904D |
| IC802 | 8-759-659-67 | IC NJM2903D |
| IC803 | 8-759-659-67 | IC NJM2903D |

**COIL**

| | | | |
|---|---|---|---|
| L803 | 1-406-677-11 | INDUCTOR | 10mH |

**TRANSISTOR**

| | | |
|---|---|---|
| Q801 | 8-729-422-27 | TRANSISTOR 2SD601A-QRS-TX |
| Q802 | 8-729-216-22 | TRANSISTOR 2SB709A-QRS-TX |
| Q803 | 8-729-216-22 | TRANSISTOR 2SB709A-QRS-TX |
| Q804 | 8-729-216-22 | TRANSISTOR 2SB709A-QRS-TX |
| Q805 | 8-729-140-97 | TRANSISTOR 2SB734-T-34 |
| Q806 | 8-729-422-27 | TRANSISTOR 2SD601A-QRS-TX |
| Q809 | 8-729-422-27 | TRANSISTOR 2SD601A-QRS-TX |
| Q810 | 8-729-043-95 | TRANSISTOR 2SC3840K |
| Q811 | 8-729-119-76 | TRANSISTOR 2SA1309A-QRSTA |
| Q812 | 8-729-119-76 | TRANSISTOR 2SA1309A-QRSTA |

**RESISTOR**

| REF.NO. | PART NO. | DESCRIPTION | REMARK | | |
|---|---|---|---|---|---|
| R801 | 1-216-089-91 | RES-CHIP | 47K | 5% | 1/10W |
| R802 | 1-216-073-00 | RES-CHIP | 10K | 5% | 1/10W |
| R803 | 1-216-081-00 | RES-CHIP | 22K | 5% | 1/10W |
| R804 | 1-216-073-00 | RES-CHIP | 10K | 5% | 1/10W |
| R805 | 1-216-065-91 | RES-CHIP | 4.7K | 5% | 1/10W |
| R806 | 1-216-081-00 | RES-CHIP | 22K | 5% | 1/10W |
| R807 | 1-216-061-00 | RES-CHIP | 3.3K | 5% | 1/10W |
| R808 | 1-216-073-00 | RES-CHIP | 10K | 5% | 1/10W |
| R809 | 1-216-081-00 | RES-CHIP | 22K | 5% | 1/10W |
| R811 | 1-216-025-91 | RES-CHIP | 100 | 5% | 1/10W |
| R812 | 1-216-061-00 | RES-CHIP | 3.3K | 5% | 1/10W |
| R813 | 1-216-041-00 | RES-CHIP | 470 | 5% | 1/10W |
| R814 | 1-215-862-11 | METAL OXIDE (KV-32FS12/32FS16 ONLY) | 68 | 5% | 1W |
| R815 | 1-215-862-11 | METAL OXIDE | 68 | 5% | 1W |
| R816 | 1-247-807-31 | CARBON | 100 | 5% | 1/4W |
| R817 | 1-216-091-00 | RES-CHIP (KV-27FV16/29FV16/29FV16C ONLY) | 56K | 5% | 1/10W |
| R817 | 1-208-822-11 | METAL CHIP (KV-32FS12/32FS16 ONLY) | 47K | 0.50% | 1/10W |
| R819 | 1-216-089-91 | RES-CHIP | 47K | 5% | 1/10W |
| R820 | 1-216-683-11 | METAL CHIP (KV-27FV16/29FV16/29FV16C ONLY) | 22K | 0.50% | 1/10W |
| R820 | 1-208-818-11 | METAL CHIP (KV-32FS12/32FS16 ONLY) | 33K | 0.50% | 1/10W |
| R821 | 1-216-077-91 | RES-CHIP (KV-27FV16/29FV16/29FV16C ONLY) | 15K | 5% | 1/10W |
| R821 | 1-216-061-00 | RES-CHIP (KV-32FS12/32FS16 ONLY) | 3.3K | 5% | 1/10W |
| R822 | 1-216-065-91 | RES-CHIP | 4.7K | 5% | 1/10W |
| R823 | 1-216-065-91 | RES-CHIP | 4.7K | 5% | 1/10W |
| R824 | 1-208-830-11 | METAL CHIP | 100K | 0.50% | 1/10W |
| R825 | 1-208-830-11 | METAL CHIP | 100K | 0.50% | 1/10W |
| R827 | 1-216-065-91 | RES-CHIP | 4.7K | 5% | 1/10W |
| R828 | 1-216-085-00 | RES-CHIP | 33K | 5% | 1/10W |
| R829 | 1-208-846-11 | METAL CHIP | 470K | 0.50% | 1/10W |
| R830 | 1-216-295-91 | SHORT | | | |

# D HA

**Note:**

**The components identified by shading and mark ⚠ are critical for safety. Replace only with part number specified.**

**Note:**

**Les composants identifies per un trame et une marque ⚠ sont critiques pour la securite. Ne les remplacer que par une piece portant le numero specifie.**

| REF.NO. | PART NO. | DESCRIPTION | REMARK | | |
|---|---|---|---|---|---|
| R831 | 1-216-049-91 | RES-CHIP | 1K | 5% | 1/10W |
| R832 | 1-216-067-00 | RES-CHIP | 5.6K | 5% | 1/10W |
| | | (KV-27FV16/29FV16/29FV16C ONLY) | | | |
| R832 | 1-216-061-00 | RES-CHIP | 3.3K | 5% | 1/10W |
| | | (KV-32FS12/32FS16 ONLY) | | | |
| R833 | 1-216-687-11 | METAL CHIP | 33K | 0.50% | 1/10W |
| | | (KV-27FV16/29FV16/29FV16C ONLY) | | | |
| R833 | 1-216-689-11 | RES-CHIP | 39K | 5% | 1/10W |
| | | (KV-32FS12/32FS16 ONLY) | | | |
| R834 | 1-216-065-91 | RES-CHIP | 4.7K | 5% | 1/10W |
| R835 | 1-216-057-00 | RES-CHIP | 2.2K | 5% | 1/10W |
| R836 | 1-216-057-00 | RES-CHIP | 2.2K | 5% | 1/10W |
| R837 | 1-208-808-11 | METAL CHIP | 12K | 0.50% | 1/10W |
| R838 | 1-247-807-31 | CARBON | 100 | 5% | 1/4W |
| R839 | 1-216-025-91 | RES-CHIP | 100 | 5% | 1/10W |
| R840 | 1-216-093-91 | RES-CHIP | 68K | 5% | 1/10W |
| | | (KV-27FV16/29FV16/29FV16C ONLY) | | | |
| R841 | 1-208-802-11 | METAL CHIP | 6.8K | 0.50% | 1/10W |
| | | (KV-27FV16/29FV16/29FV16C ONLY) | | | |
| R841 | 1-208-806-11 | METAL OXIDE | 10K | 0.50% | 1/10W |
| | | (KV-32FS12/32FS16 ONLY) | | | |
| R842 | 1-208-796-11 | METAL CHIP | 3.9K | 0.50% | 1/10W |
| R845 | 1-249-441-11 | CARBON | 100K | 5% | 1/4W |
| R846 | 1-249-441-11 | CARBON | 100K | 5% | 1/4W |
| R847 | 1-249-441-11 | CARBON | 100K | 5% | 1/4W |
| R848 | 1-215-876-00 | METAL OXIDE | 15K | 5% | 1W |
| | | (KV-27FV16/29FV16/29FV16C ONLY) | | | |
| R848 | 1-215-894-11 | METAL OXIDE | 2.2K | 5% | 2W |
| | | (KV-32FS12/32FS16 ONLY) | | | |
| R849 | 1-215-920-11 | METAL OXIDE | 3.3K | 5% | 3W |
| | | (KV-27FV16/29FV16/29FV16C ONLY) | | | |
| R849 | 1-216-486-21 | METAL OXIDE | 8.2K | 5% | 3W |
| | | (KV-32FS12/32FS16 ONLY) | | | |
| R850 | 1-216-486-21 | METAL OXIDE | 8.2K | 5% | 3W |
| | | (KV-32FS12/32FS16 ONLY) | | | |
| R851 | 1-215-894-11 | METAL OXIDE | 2.2K | 5% | 2W |
| | | (KV-27FV16/29FV16/29FV16C ONLY) | | | |
| R851 | 1-215-922-11 | METAL OXIDE | 6.8K | 5% | 3W |
| | | (KV-32FS12/32FS16 ONLY) | | | |
| R852 | 1-215-922-11 | METAL OXIDE | 6.8K | 5% | 3W |
| | | (KV-32FS12/32FS16 ONLY) | | | |
| R854 | 1-216-069-00 | RES-CHIP | 6.8K | 5% | 1/10W |
| | | (KV-27FV16/29FV16/29FV16C ONLY) | | | |
| R854 | 1-216-067-00 | RES-CHIP | 5.6K | 5% | 1/10W |
| | | (KV-32FS12/32FS16 ONLY) | | | |
| R855 | 1-216-089-91 | RES-CHIP | 47K | 5% | 1/10W |
| | | (KV-27FV16/29FV16/29FV16C ONLY) | | | |
| R855 | 1-216-091-00 | RES-CHIP | 56K | 5% | 1/10W |
| | | (KV-32FS12/32FS16 ONLY) | | | |
| R857 | 1-208-818-11 | METAL CHIP | 33K | 0.50% | 1/10W |
| | | (KV-32FS12/32FS16 ONLY) | | | |
| R860 | 1-208-806-11 | METAL CHIP | 10K | 0.50% | 1/10W |
| R862 | 1-216-057-00 | RES-CHIP | 2.2K | 5% | 1/10W |
| R863 | 1-216-057-00 | RES-CHIP | 2.2K | 5% | 1/10W |
| R864 | 1-216-033-00 | RES-CHIP | 220 | 5% | 1/10W |
| R865 | 1-216-097-91 | RES-CHIP | 100K | 5% | 1/10W |
| R866 | 1-249-429-11 | CARBON | 10K | 5% | 1/4W |
| R867 | 1-216-073-00 | RES-CHIP | 10K | 5% | 1/10W |
| R868 | 1-216-073-00 | RES-CHIP | 10K | 5% | 1/10W |
| R869 | 1-216-097-91 | RES-CHIP | 100K | 5% | 1/10W |
| R870 | 1-216-057-00 | RES-CHIP | 2.2K | 5% | 1/10W |
| R871 | 1-215-489-00 | METAL | 680K | 1% | 1/4W |
| R872 | 1-216-121-91 | RES-CHIP | 1M | 5% | 1/10W |
| R873 | 1-216-073-00 | RES-CHIP | 10K | 5% | 1/10W |
| R874 | 1-216-037-00 | RES-CHIP | 330 | 5% | 1/10W |
| R875 | 1-216-035-00 | RES-CHIP | 270 | 5% | 1/10W |
| R890 | 1-216-097-91 | RES-CHIP | 100K | 5% | 1/10W |

**TRANSFORMER**

| | | |
|---|---|---|
| T801 | 1-424-584-11 | TRANSFORMER, DYNAMIC FOCUS |

# HA

| | | |
|---|---|---|
| * | A-1372-825-A | HA MOUNTED PC BOARD (ALL EXCEPT KV-32FS12/32FS16) |

**CAPACITOR**

| | | | | | |
|---|---|---|---|---|---|
| C4202 | 1-117-534-91 | ELECT | 1µF | 20% | 100V |
| C4203 | 1-117-534-91 | ELECT | 1µF | 20% | 100V |

**CONNECTOR**

| | | |
|---|---|---|
| CN4200* | 1-564-512-11 | PLUG, CONNECTOR 9P |

**DIODE**

| | | |
|---|---|---|
| D4217 | 8-719-108-12 | DIODE RD9.1EW-T1 |
| D4218 | 8-719-108-12 | DIODE RD9.1EW-T1 |
| D4219 | 8-719-108-12 | DIODE RD9.1EW-T1 |

**JACK**

| | | |
|---|---|---|
| J4221 | 1-770-361-11 | TERMINAL BLOCK, S |

**RESISTOR**

| | | | | | |
|---|---|---|---|---|---|
| R4206 | 1-249-425-11 | CARBON | 4.7K | 5% | 1/4W |
| R4207 | 1-247-895-91 | CARBON | 470K | 5% | 1/4W |

**Note:**

**The components identified by shading and mark ⚠ are critical for safety. Replace only with part number specified.**

**Note:**

**Les composants identifies per un trame et une marque ⚠ sont critiques pour la securite. Ne les remplacer que par une piece portant le numero specifie.**

HA HB HX K

| REF.NO. | PART NO. | DESCRIPTION | REMARK | | |
|---|---|---|---|---|---|
| R4208 | 1-247-895-91 | CARBON | 470K | 5% | 1/4W |
| R4209 | 1-249-425-11 | CARBON | 4.7K | 5% | 1/4W |
| R4210 | 1-249-419-11 | CARBON | 1.5K | 5% | 1/4W |
| R4211 | 1-249-421-11 | CARBON | 2.2K | 5% | 1/4W |
| R4212 | 1-249-427-11 | CARBON | 6.8K | 5% | 1/4W |
| | **SWITCH** | | | | |
| S4217 | 1-762-196-21 | SWITCH, TACTILE | | | |
| S4218 | 1-762-196-21 | SWITCH, TACTILE | | | |
| S4219 | 1-762-196-21 | SWITCH, TACTILE | | | |
| S4220 | 1-762-196-21 | SWITCH, TACTILE | | | |

## HB

| | | | | | |
|---|---|---|---|---|---|
| * | A-1372-826-A | HB (VAR) MOUNTED PC BOARD (ALL EXCEPT KV-32FS12/32FS16) | | | |
| | **CAPACITOR** | | | | |
| C4050 | 1-104-665-11 | ELECT | 100µF | 20% | 25V |
| | **CONNECTOR** | | | | |
| CN4050* | 1-564-520-11 | PLUG, CONNECTOR 5P | | | |
| | **DIODE** | | | | |
| D4051 | 8-719-057-09 | DIODE LNJ801LPDJA | | | |
| | **IC** | | | | |
| IC4050 | 8-742-211-20 | HYB IC SBX3071-71 | | | |
| | **RESISTOR** | | | | |
| R4050 | 1-249-401-11 | CARBON | 47 | 5% | 1/4W |
| R4051 | 1-249-417-11 | CARBON | 1K | 5% | 1/4W |

## HX

| | | | | | |
|---|---|---|---|---|---|
| * | A-1372-817-A | HX MOUNTED PC BOARD | | | |
| | **CONNECTOR** | | | | |
| CN4001 | 1-564-518-11 | PLUG, CONNECTOR 3P | | | |
| | **RESISTOR** | | | | |
| R4001 | 1-216-025-91 | RES-CHIP | 100 | 5% | 1/10W |
| R4002 | 1-216-045-00 | RES-CHIP | 680 | 5% | 1/10W |
| R4003 | 1-216-047-91 | RES-CHIP | 820 | 5% | 1/10W |
| R4004 | 1-216-057-00 | RES-CHIP | 2.2K | 5% | 1/10W |
| R4005 | 1-216-069-00 | RES-CHIP | 6.8K | 5% | 1/10W |
| | **SWITCH** | | | | |
| S4001 | 1-762-196-21 | SWITCH, TACTILE | | | |
| S4002 | 1-762-196-21 | SWITCH, TACTILE | | | |
| S4003 | 1-762-196-21 | SWITCH, TACTILE | | | |
| S4004 | 1-762-196-21 | SWITCH, TACTILE | | | |
| S4005 | 1-762-196-21 | SWITCH, TACTILE | | | |
| S4006 | 1-762-196-21 | SWITCH, TACTILE | | | |

## K

| | | | | | |
|---|---|---|---|---|---|
| * | A-1380-633-A | K (VAR) MOUNTED PC BOARD (KV-27FV16/29FV16/29FV16C ONLY) | | | |
| * | A-1380-632-A | K (VAR) MOUNTED PC BOARD (KV-32FS12/32FS16 ONLY) | | | |
| | **CAPACITOR** | | | | |
| C201 | 1-126-963-11 | ELECT | 4.7µF | 20% | 50V |
| C202 | 1-126-963-11 | ELECT | 4.7µF | 20% | 50V |
| C404 | 1-164-182-11 | CERAMIC CHIP | 0.0033µF | 10% | 50V |
| C405 | 1-163-034-00 | CERAMIC CHIP | 0.033µF | | 50V |
| C406 | 1-163-011-11 | CERAMIC CHIP | 0.0015µF | 10% | 50V |
| C407 | 1-164-222-11 | CERAMIC CHIP | 0.22µF | | 25V |
| C408 | 1-164-222-11 | CERAMIC CHIP | 0.22µF | | 25V |
| C409 | 1-163-011-11 | CERAMIC CHIP | 0.0015µF | 10% | 50V |
| C410 | 1-163-034-00 | CERAMIC CHIP | 0.033µF | | 50V |
| C411 | 1-164-182-11 | CERAMIC CHIP | 0.0033µF | 10% | 50V |
| C412 | 1-163-038-91 | CERAMIC CHIP | 0.1µF | | 25V |
| C413 | 1-126-963-11 | ELECT | 4.7µF | 20% | 50V |
| C414 | 1-126-963-11 | ELECT | 4.7µF | 20% | 50V |
| C415 | 1-126-963-11 | ELECT | 4.7µF | 20% | 50V |
| C416 | 1-126-963-11 | ELECT | 4.7µF | 20% | 50V |
| C417 | 1-126-963-11 | ELECT | 4.7µF | 20% | 50V |
| C418 | 1-163-038-91 | CERAMIC CHIP | 0.1µF | | 25V |
| C419 | 1-164-346-11 | CERAMIC CHIP | 1µF | | 16V |
| C422 | 1-126-963-11 | ELECT | 4.7µF | 20% | 50V |
| C423 | 1-126-963-11 | ELECT | 4.7µF | 20% | 50V |
| C424 | 1-164-005-11 | CERAMIC CHIP (KV-27FV16/29FV16/29FV16C ONLY) | 0.47µF | | 25V |
| C425 | 1-164-346-11 | CERAMIC CHIP (KV-27FV16/29FV16/29FV16C ONLY) | 1µF | | 16V |

K

**Note:**

**The components identified by shading and mark ⚠ are critical for safety. Replace only with part number specified.**

**Note:**

**Les composants identifies per un trame et une marque ⚠ sont critiques pour la securite. Ne les remplacer que par une piece portant le numero specifie.**

| REF.NO. | PART NO. | DESCRIPTION | REMARK |
|---|---|---|---|
| C426 | 1-126-960-11 | ELECT 1µF 20% 50V (KV-27FV16/29FV16/29FV16C ONLY) | |
| C427 | 1-126-968-11 | ELECT 100µF 20% 50V (KV-27FV16/29FV16/29FV16C ONLY) | |
| C428 | 1-126-968-11 | ELECT 100µF 20% 50V (KV-27FV16/29FV16/29FV16C ONLY) | |
| C429 | 1-163-017-00 | CERAMIC CHIP 0.0047µF 10% 50V (KV-27FV16/29FV16/29FV16C ONLY) | |
| C430 | 1-164-222-11 | CERAMIC CHIP 0.22µF 25V (KV-27FV16/29FV16/29FV16C ONLY) | |
| C431 | 1-163-038-91 | CERAMIC CHIP 0.1µF 25V (KV-27FV16/29FV16/29FV16C ONLY) | |
| C432 | 1-163-021-91 | CERAMIC CHIP 0.01µF 10% 50V (KV-27FV16/29FV16/29FV16C ONLY) | |
| C433 | 1-164-346-11 | CERAMIC CHIP 1µF 16V (KV-27FV16/29FV16/29FV16C ONLY) | |
| C434 | 1-163-038-91 | CERAMIC CHIP 0.1µF 25V (KV-27FV16/29FV16/29FV16C ONLY) | |
| C440 | 1-163-038-91 | CERAMIC CHIP 0.1µF 25V | |
| C441 | 1-126-968-11 | ELECT 100µF 20% 50V | |
| C442 | 1-216-295-91 | SHORT | |
| C444 | 1-216-295-91 | SHORT | |
| C446 | 1-126-933-11 | ELECT 100µF 20% 16V | |
| C447 | 1-126-961-11 | ELECT 2.2µF 20% 50V | |
| C448 | 1-126-961-11 | ELECT 2.2µF 20% 50V | |
| C450 | 1-126-963-11 | ELECT 4.7µF 20% 50V | |
| C451 | 1-126-963-11 | ELECT 4.7µF 20% 50V | |
| C455 | 1-164-005-11 | CERAMIC CHIP 0.47µF 25V (KV-27FV16/29FV16/29FV16C ONLY) | |
| C456 | 1-163-021-91 | CERAMIC CHIP 0.01µF 10% 50V (KV-27FV16/29FV16/29FV16C ONLY) | |
| C457 | 1-163-034-00 | CERAMIC CHIP 0.033µF 50V (KV-27FV16/29FV16/29FV16C ONLY) | |
| C458 | 1-126-963-11 | ELECT 4.7µF 20% 50V (KV-27FV16/29FV16/29FV16C ONLY) | |
| C460 | 1-126-963-11 | ELECT 4.7µF 20% 50V (KV-27FV16/29FV16/29FV16C ONLY) | |
| C475 | 1-163-038-91 | CERAMIC CHIP 0.1µF 25V | |
| C490 | 1-216-295-91 | SHORT | |

**CONNECTOR**

| | | |
|---|---|---|
| CN402 * | 1-564-506-11 | PLUG, CONNECTOR 3P |
| CN450 | 1-573-301-21 | CONNECTOR, BOARD TO BOARD 20P |

**IC**

| | | |
|---|---|---|
| IC403 | 8-759-658-19 | IC NJM2198-TE2 (KV-27FV16/29FV16/29FV16C ONLY) |
| IC404 | 8-759-658-01 | IC NJW1130G-TE2 |

**CHIP CONDUCTOR**

| | | |
|---|---|---|
| JR403 | 1-216-295-91 | SHORT |
| JR404 | 1-216-295-91 | SHORT |
| JR420 | 1-216-295-91 | SHORT |
| JR421 | 1-216-295-91 | SHORT |
| JR422 | 1-216-295-91 | SHORT |
| JR423 | 1-216-295-91 | SHORT |
| JR425 | 1-216-295-91 | SHORT |
| JR426 | 1-216-295-91 | SHORT |
| JR427 | 1-216-295-91 | SHORT |
| JR428 | 1-216-295-91 | SHORT |
| JR429 | 1-216-295-91 | SHORT |
| JR452 | 1-216-295-91 | SHORT |
| JR474 | 1-216-295-91 | SHORT |
| JR477 | 1-216-295-91 | SHORT |
| JR491 | 1-216-295-91 | SHORT |

**COIL**

| | | | |
|---|---|---|---|
| L410 | 1-414-271-11 | INDUCTOR | 47µH |

**TRANSISTOR**

| | | |
|---|---|---|
| Q430 | 8-729-422-27 | TRANSISTOR 2SD601A-QRS-TX |
| Q431 | 8-729-422-27 | TRANSISTOR 2SD601A-QRS-TX |
| Q432 | 8-729-216-22 | TRANSISTOR 2SB709A-QRS-TX |
| Q433 | 8-729-216-22 | TRANSISTOR 2SB709A-QRS-TX |

**RESISTOR**

| | | | | | |
|---|---|---|---|---|---|
| R403 | 1-216-025-91 | RES-CHIP | 100 | 5% | 1/10W |
| R404 | 1-216-025-91 | RES-CHIP | 100 | 5% | 1/10W |
| R405 | 1-216-025-91 | RES-CHIP | 100 | 5% | 1/10W |
| R407 | 1-216-025-91 | RES-CHIP | 100 | 5% | 1/10W |
| R408 | 1-216-025-91 | RES-CHIP | 100 | 5% | 1/10W |
| R409 | 1-216-025-91 | RES-CHIP | 100 | 5% | 1/10W |
| R410 | 1-216-025-91 | RES-CHIP | 100 | 5% | 1/10W |
| R431 | 1-216-073-00 | RES-CHIP | 10K | 5% | 1/10W |
| R432 | 1-216-073-00 | RES-CHIP | 10K | 5% | 1/10W |
| R433 | 1-216-073-00 | RES-CHIP | 10K | 5% | 1/10W |
| R434 | 1-216-065-91 | RES-CHIP | 4.7K | 5% | 1/10W |
| R435 | 1-216-033-00 | RES-CHIP | 220 | 5% | 1/10W |
| R436 | 1-216-065-91 | RES-CHIP | 4.7K | 5% | 1/10W |
| R437 | 1-216-033-00 | RES-CHIP | 220 | 5% | 1/10W |
| R438 | 1-216-033-00 | RES-CHIP | 220 | 5% | 1/10W |
| R440 | 1-216-105-91 | RES-CHIP | 220K | 5% | 1/10W |
| R441 | 1-216-105-91 | RES-CHIP | 220K | 5% | 1/10W |
| R442 | 1-216-033-00 | RES-CHIP | 220 | 5% | 1/10W |
| R443 | 1-216-105-91 | RES-CHIP | 220K | 5% | 1/10W |
| R444 | 1-216-105-91 | RES-CHIP | 220K | 5% | 1/10W |

**Note:**

**The components identified by shading and mark ⚠ are critical for safety. Replace only with part number specified.**

**Note:**

**Les composants identifies per un trame et une marque ⚠ sont critiques pour la securite. Ne les remplacer que par une piece portant le numero specifie.**

K MA

| REF.NO. | PART NO. | DESCRIPTION | REMARK | | |
|---|---|---|---|---|---|
| R445 | 1-216-105-91 | RES-CHIP | 220K | 5% | 1/10W |
| R446 | 1-216-105-91 | RES-CHIP | 220K | 5% | 1/10W |
| R452 | 1-216-073-00 | RES-CHIP (KV-27FV16/29FV16/29FV16C ONLY) | 10K | 5% | 1/10W |
| R455 | 1-216-025-91 | RES-CHIP | 100 | 5% | 1/10W |
| R456 | 1-216-025-91 | RES-CHIP | 100 | 5% | 1/10W |
| R477 | 1-216-105-91 | RES-CHIP | 220K | 5% | 1/10W |
| R478 | 1-216-105-91 | RES-CHIP | 220K | 5% | 1/10W |

MA

| | | |
|---|---|---|
| * | A-1304-202-A | MA (VAR) MOUNTED PC BOARD (KV-27FV16/29FV16/29FV16C ONLY) |
| * | A-1304-203-A | MA (VAR) MOUNTED PC BOARD (KV-32FS12 ONLY) |
| * | A-1304-196-A | MA (VAR) MOUNTED PC BOARD (KV-32FS16 ONLY) |

**CAPACITOR**

| REF.NO. | PART NO. | DESCRIPTION | REMARK | | |
|---|---|---|---|---|---|
| C003 | 1-126-959-11 | ELECT | 0.47µF | 20% | 50V |
| C005 | 1-164-005-11 | CERAMIC CHIP (ALL EXCEPT KV-32FS12) | 0.47µF | | 25V |
| C006 | 1-126-964-11 | ELECT | 10µF | 20% | 50V |
| C009 | 1-163-259-91 | CERAMIC CHIP | 220PF | 5% | 50V |
| C010 | 1-163-035-00 | CERAMIC CHIP | 0.047µF | | 50V |
| C011 | 1-163-259-91 | CERAMIC CHIP | 220PF | 5% | 50V |
| C012 | 1-163-009-11 | CERAMIC CHIP | 0.001µF | 10% | 50V |
| C015 | 1-163-231-11 | CERAMIC CHIP | 15PF | 5% | 50V |
| C016 | 1-163-231-11 | CERAMIC CHIP | 15PF | 5% | 50V |
| C017 | 1-126-960-11 | ELECT | 1µF | 20% | 50V |
| C019 | 1-163-259-91 | CERAMIC CHIP | 220PF | 5% | 50V |
| C020 | 1-163-038-91 | CERAMIC CHIP | 0.1µF | | 25V |
| C021 | 1-163-259-91 | CERAMIC CHIP | 220PF | 5% | 50V |
| C022 | 1-163-135-00 | CERAMIC CHIP | 560PF | 5% | 50V |
| C027 | 1-163-009-11 | CERAMIC CHIP | 0.001µF | 10% | 50V |
| C028 | 1-163-259-91 | CERAMIC CHIP | 220PF | 5% | 50V |
| C032 | 1-164-004-11 | CERAMIC CHIP | 0.1µF | 10% | 25V |
| C033 | 1-163-259-91 | CERAMIC CHIP | 220PF | 5% | 50V |
| C034 | 1-163-037-11 | CERAMIC CHIP | 0.022µF | 10% | 50V |
| C037 | 1-164-161-11 | CERAMIC CHIP | 0.0022µF | 10% | 50V |
| C038 | 1-126-935-11 | ELECT | 470µF | 20% | 16V |
| C039 | 1-126-964-11 | ELECT | 10µF | 20% | 50V |
| C040 | 1-163-229-11 | CERAMIC CHIP | 12PF | 5% | 50V |
| C041 | 1-163-229-11 | CERAMIC CHIP | 12PF | 5% | 50V |
| C042 | 1-163-259-91 | CERAMIC CHIP | 220PF | 5% | 50V |
| C043 | 1-163-009-11 | CERAMIC CHIP | 0.001µF | 10% | 50V |
| C044 | 1-163-009-11 | CERAMIC CHIP | 0.001µF | 10% | 50V |
| C045 | 1-164-161-11 | CERAMIC CHIP | 0.0022µF | 10% | 50V |
| C046 | 1-104-664-11 | ELECT | 47µF | 20% | 25V |
| C047 | 1-163-259-91 | CERAMIC CHIP | 220PF | 5% | 50V |
| C048 | 1-163-259-91 | CERAMIC CHIP | 220PF | 5% | 50V |
| C051 | 1-126-935-11 | ELECT | 470µF | 20% | 16V |
| C060 | 1-163-005-11 | CERAMIC CHIP | 470PF | 10% | 50V |
| C062 | 1-126-959-11 | ELECT | 0.47µF | 20% | 50V |
| C063 | 1-137-194-81 | MYLAR | 0.47µF | 5% | 50V |
| C064 | 1-163-017-00 | CERAMIC CHIP | 0.0047µF | 10% | 50V |
| C070 | 1-163-009-11 | CERAMIC CHIP | 0.001µF | 10% | 50V |
| C071 | 1-163-009-11 | CERAMIC CHIP | 0.001µF | 10% | 50V |
| C076 | 1-163-259-91 | CERAMIC CHIP | 220PF | 5% | 50V |
| C077 | 1-163-259-91 | CERAMIC CHIP | 220PF | 5% | 50V |
| C091 | 1-163-037-11 | CERAMIC CHIP | 0.022µF | 10% | 50V |
| C093 | 1-163-259-91 | CERAMIC CHIP | 220PF | 5% | 50V |
| C097 | 1-163-009-11 | CERAMIC CHIP | 0.001µF | 10% | 50V |
| C099 | 1-126-960-11 | ELECT | 1µF | 20% | 50V |
| C151 | 1-126-960-11 | ELECT (ALL EXCEPT KV-32FS12) | 1µF | 20% | 50V |
| C153 | 1-163-017-00 | CERAMIC CHIP (ALL EXCEPT KV-32FS12) | 0.0047µF | 10% | 50V |
| C154 | 1-126-967-11 | ELECT (ALL EXCEPT KV-32FS12) | 47µF | 20% | 50V |
| C155 | 1-126-964-11 | ELECT (ALL EXCEPT KV-32FS12) | 10µF | 20% | 50V |
| C156 | 1-104-664-11 | ELECT (ALL EXCEPT KV-32FS12) | 47µF | 20% | 25V |
| C157 | 1-126-968-11 | ELECT (ALL EXCEPT KV-32FS12) | 100µF | 20% | 50V |
| C302 | 1-163-021-91 | CERAMIC CHIP (KV-32FS12/32FS16 ONLY) | 0.01µF | 10% | 50V |
| C303 | 1-163-021-91 | CERAMIC CHIP (KV-32FS12/32FS16 ONLY) | 0.01µF | 10% | 50V |
| C304 | 1-163-021-91 | CERAMIC CHIP (KV-32FS12/32FS16 ONLY) | 0.01µF | 10% | 50V |
| C305 | 1-126-933-11 | ELECT (KV-32FS12/32FS16 ONLY) | 100µF | 20% | 16V |
| C306 | 1-164-346-11 | CERAMIC CHIP (KV-27FV16/29FV16/29FV16C ONLY) | 1µF | | 16V |
| C307 | 1-163-227-11 | CERAMIC CHIP (KV-32FS12/32FS16 ONLY) | 10PF | 0.50PF | 50V |
| C308 | 1-163-021-91 | CERAMIC CHIP (KV-32FS12/32FS16 ONLY) | 0.01µF | 10% | 50V |
| C309 | 1-126-933-11 | ELECT (KV-32FS12/32FS16 ONLY) | 100µF | 20% | 16V |
| C310 | 1-126-960-11 | ELECT | 1µF | 20% | 50V |
| C311 | 1-163-123-00 | CERAMIC CHIP (KV-32FS12/32FS16 ONLY) | 180PF | 5% | 50V |
| C312 | 1-164-005-11 | CERAMIC CHIP | 0.47µF | | 25V |
| C313 | 1-163-021-91 | CERAMIC CHIP | 0.01µF | 10% | 50V |
| C314 | 1-163-231-11 | CERAMIC CHIP (KV-32FS12/32FS16 ONLY) | 15PF | 5% | 50V |

MA

**Note:**

**The components identified by shading and mark ⚠ are critical for safety. Replace only with part number specified.**

**Note:**

**Les composants identifies per un trame et une marque ⚠ sont critiques pour la securite. Ne les remplacer que par une piece portant le numero specifie.**

| REF.NO. | PART NO. | DESCRIPTION | REMARK | | |
|---|---|---|---|---|---|
| C315 | 1-104-664-11 | ELECT | 47µF | 20% | 25V |
| C316 | 1-163-243-11 | CERAMIC CHIP | 47PF | 5% | 50V |
| C317 | 1-163-021-91 | CERAMIC CHIP (KV-32FS12/32FS16 ONLY) | 0.01µF | 10% | 50V |
| C318 | 1-163-021-91 | CERAMIC CHIP | 0.01µF | 10% | 50V |
| C319 | 1-126-767-11 | ELECT | 1000µF | 20% | 16V |
| C320 | 1-164-005-11 | CERAMIC CHIP | 0.47µF | | 25V |
| C321 | 1-164-005-11 | CERAMIC CHIP | 0.47µF | | 25V |
| C322 | 1-164-005-11 | CERAMIC CHIP | 0.47µF | | 25V |
| C323 | 1-164-004-11 | CERAMIC CHIP | 0.1µF | 10% | 25V |
| C324 | 1-163-231-11 | CERAMIC CHIP (KV-32FS12/32FS16 ONLY) | 15PF | 5% | 50V |
| C325 | 1-164-005-11 | CERAMIC CHIP | 0.47µF | | 25V |
| C326 | 1-164-004-11 | CERAMIC CHIP | 0.1µF | 10% | 25V |
| C328 | 1-164-004-11 | CERAMIC CHIP | 0.1µF | 10% | 25V |
| C329 | 1-164-004-11 | CERAMIC CHIP | 0.1µF | 10% | 25V |
| C330 | 1-126-960-11 | ELECT | 1µF | 20% | 50V |
| C331 | 1-163-021-91 | CERAMIC CHIP | 0.01µF | 10% | 50V |
| C332 | 1-163-010-11 | CERAMIC CHIP (KV-32FS12/32FS16 ONLY) | 0.0012µF | 10% | 50V |
| C334 | 1-163-003-11 | CERAMIC CHIP | 330PF | 10% | 50V |
| C335 | 1-126-963-11 | ELECT | 4.7µF | 20% | 50V |
| C336 | 1-104-664-11 | ELECT (KV-32FS12/32FS16 ONLY) | 47µF | 20% | 25V |
| C338 | 1-164-004-11 | CERAMIC CHIP | 0.1µF | 10% | 25V |
| C339 | 1-126-960-11 | ELECT | 1µF | 20% | 50V |
| C340 | 1-126-933-11 | ELECT (KV-32FS12/32FS16 ONLY) | 100µF | 20% | 16V |
| C341 | 1-163-233-11 | CERAMIC CHIP | 18PF | 5% | 50V |
| C345 | 1-163-021-91 | CERAMIC CHIP (ALL EXCEPT KV-32FS12) | 0.01µF | 10% | 50V |
| C346 | 1-163-021-91 | CERAMIC CHIP (ALL EXCEPT KV-32FS12) | 0.01µF | 10% | 50V |
| C347 | 1-163-021-91 | CERAMIC CHIP (ALL EXCEPT KV-32FS12) | 0.01µF | 10% | 50V |
| C348 | 1-164-005-11 | CERAMIC CHIP | 0.47µF | | 25V |
| C350 | 1-126-959-11 | ELECT (KV-32FS12/32FS16 ONLY) | 0.47µF | 20% | 50V |
| C351 | 1-163-021-91 | CERAMIC (KV-32FS12/32FS16 ONLY) | 0.01µF | 10% | 50V |
| C352 | 1-163-021-91 | CERAMIC CHIP | 0.01µF | 10% | 50V |
| C353 | 1-163-021-91 | CERAMIC CHIP | 0.01µF | 10% | 50V |
| C354 | 1-126-933-11 | ELECT (KV-32FS12/32FS16 ONLY) | 100µF | 20% | 16V |
| C355 | 1-163-021-91 | CERAMIC CHIP (KV-32FS12/32FS16 ONLY) | 0.01µF | 10% | 50V |
| C356 | 1-164-004-11 | CERAMIC CHIP | 0.1µF | 10% | 25V |
| C357 | 1-104-664-11 | ELECT | 47µF | 20% | 25V |
| C358 | 1-104-664-11 | ELECT | 47µF | 20% | 25V |
| C359 | 1-163-038-91 | CERAMIC CHIP | 0.1µF | | 25V |
| C360 | 1-126-959-11 | ELECT | 0.47µF | 20% | 50V |
| C361 | 1-163-038-91 | CERAMIC CHIP | 0.1µF | | 25V |
| C362 | 1-104-664-11 | ELECT | 47µF | 20% | 25V |
| C363 | 1-163-038-91 | CERAMIC CHIP | 0.1µF | | 25V |
| C364 | 1-164-004-11 | CERAMIC CHIP | 0.1µF | 10% | 25V |
| C365 | 1-137-194-81 | MYLAR | 0.47µF | 5% | 50V |
| C366 | 1-163-021-91 | CERAMIC CHIP (KV-32FS12/32FS16 ONLY) | 0.01µF | 10% | 50V |
| C367 | 1-163-005-11 | CERAMIC CHIP | 470PF | 10% | 50V |
| C368 | 1-163-021-91 | CERAMIC CHIP (KV-32FS12/32FS16 ONLY) | 0.01µF | 10% | 50V |
| C369 | 1-163-021-91 | CERAMIC CHIP (KV-32FS12/32FS16 ONLY) | 0.01µF | 10% | 50V |
| C370 | 1-126-933-11 | ELECT | 100µF | 20% | 16V |
| C371 | 1-163-243-11 | CERAMIC CHIP | 47PF | 5% | 50V |
| C377 | 1-126-963-11 | ELECT | 4.7µF | 20% | 50V |
| C380 | 1-163-021-91 | CERAMIC CHIP (KV-32FS12 ONLY) | 0.01UF | 10% | 50V |
| C381 | 1-163-021-91 | CERAMIC CHIP (KV-32FS12 ONLY) | 0.01UF | 10% | 50V |
| C382 | 1-163-021-91 | CERAMIC CHIP (KV-32FS12 ONLY) | 0.01UF | 10% | 50V |
| C389 | 1-115-185-11 | CERAMIC CHIP (KV-27FV16/29FV16/29FV16C ONLY) | 0.033µF | 10% | 50V |
| C389 | 1-104-760-11 | CERAMIC CHIP (KV-32FS12/32FS16 ONLY) | 0.047UF | 10% | 50V |
| C390 | 1-163-231-11 | CERAMIC CHIP (KV-32FS12/32FS16 ONLY) | 15PF | 5% | 50V |
| C391 | 1-126-933-11 | ELECT (KV-32FS12/32FS16 ONLY) | 100µF | 20% | 16V |
| C395 | 1-163-021-91 | CERAMIC CHIP | 0.01µF | 10% | 50V |
| C396 | 1-164-004-11 | CERAMIC CHIP | 0.1µF | 10% | 25V |
| C397 | 1-163-021-91 | CERAMIC CHIP (KV-32FS12/32FS16 ONLY) | 0.01µF | 10% | 50V |
| C398 | 1-126-964-11 | ELECT | 10µF | 20% | 50V |
| C451 | 1-164-346-11 | CERAMIC CHIP (ALL EXCEPT KV-32FS12) | 1µF | | 16V |
| C452 | 1-164-346-11 | CERAMIC CHIP (ALL EXCEPT KV-32FS12) | 1µF | | 16V |
| C453 | 1-164-346-11 | CERAMIC CHIP (ALL EXCEPT KV-32FS12) | 1µF | | 16V |
| C454 | 1-164-346-11 | CERAMIC CHIP (ALL EXCEPT KV-32FS12) | 1µF | | 16V |

**CONNECTOR**

| | | |
|---|---|---|
| CN001 | 1-764-334-11 | PLUG, CONNECTOR 11P (KV-27FV16/29FV16/29FV16C ONLY) |
| CN001 * | 1-564-511-11 | PLUG, CONNECTOR 8P (KV-32FS12/32FS16 ONLY) |
| CN002 * | 1-560-124-00 | PLUG, CONNECTOR (2.5MM) 4P |
| CN003 * | 1-564-512-11 | PLUG, CONNECTOR 9P |

MA

**Note:**

**The components identified by shading and mark ⚠ are critical for safety. Replace only with part number specified.**

**Note:**

**Les composants identifies per un trame et une marque ⚠ sont critiques pour la securite. Ne les remplacer que par une piece portant le numero specifie.**

| REF.NO. | PART NO. | DESCRIPTION | REMARK |
|---|---|---|---|
| CN004 * | 1-564-512-11 | PLUG, CONNECTOR 9P | |
| CN005 * | 1-764-333-11 | PLUG, CONNECTOR 10P | |
| CN006 * | 1-764-333-11 | PLUG, CONNECTOR 10P | |
| CN302 * | 1-564-507-11 | PLUG, CONNECTOR 4P | |
| CN304 * | 1-564-507-11 | PLUG, CONNECTOR 4P (ALL EXCEPT KV-32FS12) | |
| CN305 | 1-573-298-21 | CONNECTOR, BOARD TO BOARD 20P (ALL EXCEPT KV-32FS12) | |
| CN306 * | 1-691-616-21 | CONNECTOR, BOARD TO BOARD 15P (KV-27FV16/29FV16/29FV16C ONLY) | |
| CN309 * | 1-564-506-11 | PLUG, CONNECTOR 3P | |
| CN401 * | 1-564-505-11 | PLUG, CONNECTOR 2P (ALL EXCEPT KV-32FS12) | |

**DIODE**

| | | | |
|---|---|---|---|
| D001 | 8-719-976-99 | DIODE UDZ-TE-17-5.1B | |
| D002 | 8-719-110-17 | DIODE MTZJ-T-77-10B | |
| D003 | 8-719-073-01 | DIODE MA111-TX | |
| D004 | 8-719-976-99 | DIODE UDZ-TE-17-5.1B | |
| D005 | 8-719-109-89 | DIODE MTZJ-T-77-5.6C | |
| D006 | 8-719-977-22 | DIODE UDZ-TE-17-9.1B | |
| D075 | 8-719-073-01 | DIODE MA111-TX | |
| D301 | 8-719-921-44 | DIODE MTZJ-T-77-5.1C | |
| D303 | 8-719-991-33 | DIODE 1SS133T-77 (ALL EXCEPT KV-32FS12) | |
| D304 | 8-719-981-99 | DIODE MTZJ-T-77-3.3 (KV-27FV16/29FV16/29FV16C ONLY) | |
| D305 | 8-719-921-44 | DIODE MTZJ-T-77-5.1C | |
| D360 | 8-719-914-44 | DIODE DAP202K-T-146 | |

**FERRITE BEAD**

| | | | |
|---|---|---|---|
| FB001 | 1-414-234-22 | INDUCTOR CHIP 0µH | |
| FB002 | 1-414-234-22 | INDUCTOR CHIP 0µH | |
| FB301 | 1-412-911-11 | FERRITE 0µH (KV-32FS12/32FS16 ONLY) | |

**FILTER**

| | | | |
|---|---|---|---|
| FL301 | 1-239-847-11 | FILTER, LOW PASS (KV-32FS12/32FS16 ONLY) | |
| FL302 | 1-239-847-11 | FILTER, LOW PASS (KV-32FS12/32FS16 ONLY) | |
| FL303 | 1-239-847-11 | FILTER, LOW PASS (KV-32FS12/32FS16 ONLY) | |

**IC**

| | | | |
|---|---|---|---|
| IC001 | 8-759-680-52 | IC M37280MK-111SP | |
| IC002 | 8-759-663-29 | IC MM1476AF(TP) | |
| IC003 | 8-759-527-77 | IC M24C16-MN6T | |
| IC301 ⚠ | 8-752-098-86 | IC CXA2154S (ALL EXCEPT KV-32FS12) | |
| IC301 ⚠ | 8-752-094-98 | IC CXA2154S (KV-32FS12 ONLY) | |
| IC302 | 8-759-655-75 | IC TC90A49P (KV-32FS12/32FS16 ONLY) | |

**CHIP CONDUCTOR**

| | | | |
|---|---|---|---|
| JR001 | 1-216-295-91 | SHORT | |
| JR002 | 1-216-295-91 | SHORT | |
| JR003 | 1-216-295-91 | SHORT | |
| JR005 | 1-216-295-91 | SHORT | |
| JR006 | 1-216-295-91 | SHORT | |
| JR007 | 1-216-295-91 | SHORT | |
| JR008 | 1-216-295-91 | SHORT | |
| JR010 | 1-216-295-91 | SHORT | |
| JR011 | 1-216-295-91 | SHORT | |
| JR090 | 1-216-295-91 | SHORT | |
| JR100 | 1-216-295-91 | SHORT | |
| JR101 | 1-216-295-91 | SHORT | |
| JR296 | 1-216-295-91 | SHORT | |
| JR297 | 1-216-295-91 | SHORT | |
| JR298 | 1-216-295-91 | SHORT | |
| JR350 | 1-216-295-91 | SHORT | |
| JR378 | 1-216-295-91 | SHORT | |
| JR379 | 1-216-295-91 | SHORT | |
| JR399 | 1-216-295-91 | SHORT | |
| JR401 | 1-216-295-91 | SHORT | |

**COIL**

| | | | |
|---|---|---|---|
| L002 | 1-414-273-11 | INDUCTOR 100µH | |
| L003 | 1-414-273-11 | INDUCTOR 100µH | |
| L040 | 1-408-963-11 | INDUCTOR 2.7µH | |
| L150 | 1-414-267-11 | INDUCTOR 10µH (ALL EXCEPT KV-32FS12) | |
| L151 | 1-414-273-11 | INDUCTOR 100µH (ALL EXCEPT KV-32FS12) | |
| L301 | 1-414-267-11 | INDUCTOR 10µH | |
| L302 | 1-414-271-11 | INDUCTOR 47µH | |
| L303 | 1-414-856-11 | INDUCTOR 10µH (KV-32FS12/32FS16 ONLY) | |
| L304 | 1-414-856-11 | INDUCTOR 10µH (KV-32FS12/32FS16 ONLY) | |
| L305 | 1-414-267-11 | INDUCTOR 10µH | |
| L308 | 1-414-273-11 | INDUCTOR 100µH | |
| L310 | 1-414-273-11 | INDUCTOR 100µH | |
| L350 | 1-414-856-11 | INDUCTOR 10µH (KV-32FS12/32FS16 ONLY) | |
| L351 | 1-414-856-11 | INDUCTOR 10µH (KV-32FS12/32FS16 ONLY) | |

MA

**Note:**

**The components identified by shading and mark ⚠ are critical for safety. Replace only with part number specified.**

**Note:**

**Les composants identifies per un trame et une marque ⚠ sont critiques pour la securite. Ne les remplacer que par une piece portant le numero specifie.**

| REF.NO. | PART NO. | DESCRIPTION | REMARK |
|---|---|---|---|
| L356 | 1-216-296-91 | SHORT | |
| | | (ALL EXCEPT KV-32FS12) | |
| L357 | 1-216-296-91 | SHORT | |
| | | (ALL EXCEPT KV-32FS12) | |

**TRANSISTOR**

| REF.NO. | PART NO. | DESCRIPTION | REMARK |
|---|---|---|---|
| Q001 | 8-729-216-22 | TRANSISTOR 2SB709A-QRS-TX | |
| Q002 | 8-729-422-27 | TRANSISTOR 2SD601A-QRS-TX | |
| Q003 | 8-729-422-27 | TRANSISTOR 2SD601A-QRS-TX | |
| Q004 | 8-729-216-22 | TRANSISTOR 2SB709A-QRS-TX | |
| Q006 | 8-729-216-22 | TRANSISTOR 2SB709A-QRS-TX | |
| Q082 | 8-729-422-27 | TRANSISTOR 2SD601A-QRS-TX | |
| Q151 | 8-729-216-22 | TRANSISTOR 2SB709A-QRS-TX | |
| | | (ALL EXCEPT KV-32FS12) | |
| Q152 | 8-729-422-27 | TRANSISTOR 2SD601A-QRS-TX | |
| | | (ALL EXCEPT KV-32FS12) | |
| Q301 | 8-729-422-27 | TRANSISTOR 2SD601A-QRS-TX | |
| | | (KV-27FV16/29FV16/29FV16C ONLY) | |
| Q302 | 8-729-422-27 | TRANSISTOR 2SD601A-QRS-TX | |
| | | (KV-32FS12/32FS16 ONLY) | |
| Q303 | 8-729-216-22 | TRANSISTOR 2SB709A-QRS-TX | |
| Q304 | 8-729-422-27 | TRANSISTOR 2SD601A-QRS-TX | |
| | | (KV-27FV16/29FV16/29FV16C ONLY) | |
| Q305 | 8-729-216-22 | TRANSISTOR 2SB709A-QRS-TX | |
| Q306 | 8-729-216-22 | TRANSISTOR 2SB709A-QRS-TX | |
| | | (KV-27FV16/29FV16/29FV16C ONLY) | |
| Q310 | 8-729-216-22 | TRANSISTOR 2SB709A-QRS-TX | |
| | | (KV-32FS12/32FS16 ONLY) | |
| Q349 | 8-729-422-27 | TRANSISTOR 2SD601A-QRS-TX | |
| | | (KV-32FS12/32FS16 ONLY) | |
| Q350 | 8-729-216-22 | TRANSISTOR 2SB709A-QRS-TX | |
| | | (KV-32FS12/32FS16 ONLY) | |
| Q351 | 8-729-216-22 | TRANSISTOR 2SB709A-QRS-TX | |
| | | (KV-32FS12/32FS16 ONLY) | |
| Q352 | 8-729-422-27 | TRANSISTOR 2SD601A-QRS-TX | |
| | | (KV-32FS12/32FS16 ONLY) | |
| Q354 | 8-729-216-22 | TRANSISTOR 2SB709A-QRS-TX | |
| | | (KV-32FS12/32FS16 ONLY) | |
| Q355 | 8-729-216-22 | TRANSISTOR 2SB709A-QRS-TX | |
| | | (KV-32FS12/32FS16 ONLY) | |
| Q356 | 8-729-422-27 | TRANSISTOR 2SD601A-QRS-TX | |
| Q358 | 8-729-422-27 | TRANSISTOR 2SD601A-QRS-TX | |
| | | (KV-32FS12/32FS16 ONLY) | |
| Q359 | 8-729-216-22 | TRANSISTOR 2SB709A-QRS-TX | |
| | | (KV-32FS12/32FS16 ONLY) | |
| Q365 | 8-729-422-27 | TRANSISTOR 2SD601A-QRS-TX | |
| Q369 | 8-729-216-22 | TRANSISTOR 2SB709A-QRS-TX | |
| | | (KV-32FS12/32FS16 ONLY) | |
| Q368 | 8-729-422-27 | TRANSISTOR 2SD601A-QRS-TX | |
| Q370 | 8-729-216-22 | TRANSISTOR 2SB709A-QRS-TX | |
| | | (KV-32FS12/32FS16 ONLY) | |
| Q375 | 8-729-422-27 | TRANSISTOR 2SD601A-QRS-TX | |
| Q378 | 8-729-216-22 | TRANSISTOR 2SB709A-QRS-TX | |
| | | (ALL EXCEPT KV-32FS12) | |
| Q379 | 8-729-216-22 | TRANSISTOR 2SB709A-QRS-TX | |
| | | (KV-27FV16/29FV16/29FV16C ONLY) | |
| Q380 | 8-729-216-22 | TRANSISTOR 2SB709A-QRS-TX | |
| | | (KV-27FV16/29FV16/29FV16C ONLY) | |
| Q387 | 8-729-216-22 | TRANSISTOR 2SB709A-QRS-TX | |
| Q388 | 8-729-216-22 | TRANSISTOR 2SB709A-QRS-TX | |
| Q389 | 8-729-216-22 | TRANSISTOR 2SB709A-QRS-TX | |

**RESISTOR**

| REF.NO. | PART NO. | DESCRIPTION | REMARK | | |
|---|---|---|---|---|---|
| R001 | 1-216-043-91 | RES-CHIP | 560 | 5% | 1/10W |
| R002 | 1-216-041-00 | RES-CHIP | 470 | 5% | 1/10W |
| R003 | 1-247-807-31 | CARBON | 100 | 5% | 1/4W |
| R004 | 1-216-061-00 | RES-CHIP | 3.3K | 5% | 1/10W |
| R005 | 1-216-295-91 | SHORT | | | |
| R006 | 1-216-025-91 | RES-CHIP | 100 | 5% | 1/10W |
| R007 | 1-216-025-91 | RES-CHIP | 100 | 5% | 1/10W |
| R008 | 1-216-049-91 | RES-CHIP | 1K | 5% | 1/10W |
| R009 | 1-216-121-91 | RES-CHIP | 1M | 5% | 1/10W |
| R010 | 1-216-033-00 | RES-CHIP | 220 | 5% | 1/10W |
| R011 | 1-216-033-00 | RES-CHIP | 220 | 5% | 1/10W |
| R012 | 1-216-045-00 | RES-CHIP | 680 | 5% | 1/10W |
| R013 | 1-249-417-11 | CARBON | 1K | 5% | 1/4W |
| R014 | 1-216-073-00 | RES-CHIP | 10K | 5% | 1/10W |
| R015 | 1-216-073-00 | RES-CHIP | 10K | 5% | 1/10W |
| R016 | 1-216-041-00 | RES-CHIP | 470 | 5% | 1/10W |
| R017 | 1-208-798-11 | METAL CHIP | 4.7K | 0.50% | 1/10W |
| R018 | 1-247-815-91 | CARBON | 220 | 5% | 1/4W |
| R019 | 1-216-113-00 | RES-CHIP | 470K | 5% | 1/10W |
| R020 | 1-216-033-00 | RES-CHIP | 220 | 5% | 1/10W |
| R021 | 1-249-429-11 | CARBON | 10K | 5% | 1/4W |
| R022 | 1-247-815-91 | CARBON | 220 | 5% | 1/4W |
| R023 | 1-249-429-11 | CARBON | 10K | 5% | 1/4W |
| R024 | 1-247-815-91 | CARBON | 220 | 5% | 1/4W |
| R025 | 1-249-426-11 | CARBON | 5.6K | 5% | 1/4W |
| R026 | 1-249-426-11 | CARBON | 5.6K | 5% | 1/4W |
| R027 | 1-249-426-11 | CARBON | 5.6K | 5% | 1/4W |
| R028 | 1-216-049-91 | RES-CHIP | 1K | 5% | 1/10W |
| R029 | 1-216-065-91 | RES-CHIP | 4.7K | 5% | 1/10W |
| R030 | 1-216-065-91 | RES-CHIP | 4.7K | 5% | 1/10W |
| R031 | 1-216-355-11 | METAL OXIDE | 3.3 | 5% | 1W |
| R032 | 1-216-033-00 | RES-CHIP | 220 | 5% | 1/10W |
| R033 | 1-216-033-00 | RES-CHIP | 220 | 5% | 1/10W |
| R034 | 1-216-033-00 | RES-CHIP | 220 | 5% | 1/10W |
| R035 | 1-216-033-00 | RES-CHIP | 220 | 5% | 1/10W |
| R036 | 1-216-049-91 | RES-CHIP | 1K | 5% | 1/10W |
| R037 | 1-247-815-91 | CARBON | 220 | 5% | 1/4W |
| R038 | 1-216-049-91 | RES-CHIP | 1K | 5% | 1/10W |

MA

**Note:**

**The components identified by shading and mark ⚠ are critical for safety. Replace only with part number specified.**

**Note:**

**Les composants identifies per un trame et une marque ⚠ sont critiques pour la securite. Ne les remplacer que par une piece portant le numero specifie.**

| REF.NO. | PART NO. | DESCRIPTION | REMARK | | |
|---|---|---|---|---|---|
| R039 | 1-216-045-00 | RES-CHIP | 680 | 5% | 1/10W |
| R040 | 1-247-815-91 | CARBON | 220 | 5% | 1/4W |
| R041 | 1-216-045-00 | RES-CHIP | 680 | 5% | 1/10W |
| R042 | 1-216-071-00 | RES-CHIP | 8.2K | 5% | 1/10W |
| R043 | 1-249-417-11 | CARBON | 1K | 5% | 1/4W |
| R044 | 1-216-033-00 | RES-CHIP | 220 | 5% | 1/10W |
| R045 | 1-216-065-91 | RES-CHIP | 4.7K | 5% | 1/10W |
| R046 | 1-216-033-00 | RES-CHIP | 220 | 5% | 1/10W |
| R047 | 1-216-065-91 | RES-CHIP | 4.7K | 5% | 1/10W |
| R048 | 1-216-025-91 | RES-CHIP | 100 | 5% | 1/10W |
| | | (ALL EXCEPT KV-32FS12) | | | |
| R050 | 1-216-033-00 | RES-CHIP | 220 | 5% | 1/10W |
| R051 | 1-216-033-00 | RES-CHIP | 220 | 5% | 1/10W |
| R052 | 1-249-417-11 | CARBON | 1K | 5% | 1/4W |
| R054 | 1-216-065-91 | RES-CHIP | 4.7K | 5% | 1/10W |
| R055 | 1-216-065-91 | RES-CHIP | 4.7K | 5% | 1/10W |
| R056 | 1-208-798-11 | METAL CHIP | 4.7K | 0.50% | 1/10W |
| R057 | 1-216-065-91 | RES-CHIP | 4.7K | 5% | 1/10W |
| R058 | 1-216-065-91 | RES-CHIP | 4.7K | 5% | 1/10W |
| R060 | 1-247-815-91 | CARBON | 220 | 5% | 1/4W |
| R061 | 1-216-033-00 | RES-CHIP | 220 | 5% | 1/10W |
| R064 | 1-216-295-91 | SHORT | | | |
| R069 | 1-247-815-91 | CARBON | 220 | 5% | 1/4W |
| | | (ALL EXCEPT KV-32FS12) | | | |
| R070 | 1-216-065-91 | RES-CHIP | 4.7K | 5% | 1/10W |
| R071 | 1-216-065-91 | RES-CHIP | 4.7K | 5% | 1/10W |
| R073 | 1-249-425-11 | CARBON | 4.7K | 5% | 1/4W |
| R074 | 1-216-065-91 | RES-CHIP | 4.7K | 5% | 1/10W |
| R077 | 1-216-097-91 | RES-CHIP | 100K | 5% | 1/10W |
| R085 | 1-216-065-91 | RES-CHIP | 4.7K | 5% | 1/10W |
| | | (KV-27FV16/29FV16/29FV16C ONLY) | | | |
| R086 | 1-216-045-00 | RES-CHIP | 680 | 5% | 1/10W |
| R087 | 1-216-045-00 | RES-CHIP | 680 | 5% | 1/10W |
| R088 | 1-216-045-00 | RES-CHIP | 680 | 5% | 1/10W |
| R089 | 1-216-033-00 | RES-CHIP | 220 | 5% | 1/10W |
| | | (KV-27FV16/29FV16/29FV16C ONLY) | | | |
| R091 | 1-216-073-00 | RES-CHIP | 10K | 5% | 1/10W |
| R092 | 1-208-798-11 | METAL CHIP | 4.7K | 0.50% | 1/10W |
| R093 | 1-216-065-91 | RES-CHIP | 4.7K | 5% | 1/10W |
| R094 | 1-216-065-91 | RES-CHIP | 4.7K | 5% | 1/10W |
| R095 | 1-216-065-91 | RES-CHIP | 4.7K | 5% | 1/10W |
| R096 | 1-216-065-91 | RES-CHIP | 4.7K | 5% | 1/10W |
| R097 | 1-249-414-11 | CARBON | 560 | 5% | 1/4W |
| R099 | 1-216-089-91 | RES-CHIP | 47K | 5% | 1/10W |
| R150 | 1-216-053-00 | RES-CHIP | 1.5K | 5% | 1/10W |
| | | (ALL EXCEPT KV-32FS12) | | | |
| R151 | 1-216-025-91 | RES-CHIP | 100 | 5% | 1/10W |
| | | (ALL EXCEPT KV-32FS12) | | | |
| R154 | 1-216-043-91 | RES-CHIP | 560 | 5% | 1/10W |
| | | (ALL EXCEPT KV-32FS12) | | | |
| R155 | 1-216-043-91 | RES-CHIP | 560 | 5% | 1/10W |
| | | (ALL EXCEPT KV-32FS12) | | | |
| R156 | 1-216-085-00 | RES-CHIP | 33K | 5% | 1/10W |
| | | (ALL EXCEPT KV-32FS12) | | | |
| R157 | 1-216-081-00 | RES-CHIP | 22K | 5% | 1/10W |
| | | (ALL EXCEPT KV-32FS12) | | | |
| R158 | 1-216-025-91 | RES-CHIP | 100 | 5% | 1/10W |
| | | (ALL EXCEPT KV-32FS12) | | | |
| R159 | 1-216-025-91 | RES-CHIP | 100 | 5% | 1/10W |
| | | (ALL EXCEPT KV-32FS12) | | | |
| R251 | 1-216-065-91 | RES-CHIP | 4.7K | 5% | 1/10W |
| R253 | 1-216-049-91 | RES-CHIP | 1K | 5% | 1/10W |
| R256 | 1-216-073-00 | RES-CHIP | 10K | 5% | 1/10W |
| R257 | 1-216-049-91 | RES-CHIP | 1K | 5% | 1/10W |
| R258 | 1-216-065-91 | RES-CHIP | 4.7K | 5% | 1/10W |
| R259 | 1-249-429-11 | CARBON | 10K | 5% | 1/4W |
| R260 | 1-247-815-91 | CARBON | 220 | 5% | 1/4W |
| R261 | 1-216-113-00 | RES-CHIP | 470K | 5% | 1/10W |
| R262 | 1-247-807-31 | CARBON | 100 | 5% | 1/4W |
| R263 | 1-216-025-91 | RES-CHIP | 100 | 5% | 1/10W |
| R264 | 1-216-081-00 | RES-CHIP | 22K | 5% | 1/10W |
| | | (ALL EXCEPT KV-32FS12) | | | |
| R266 | 1-216-081-00 | RES-CHIP | 22K | 5% | 1/10W |
| | | (ALL EXCEPT KV-32FS12) | | | |
| R267 | 1-216-049-91 | RES-CHIP | 1K | 5% | 1/10W |
| R268 | 1-216-045-00 | RES-CHIP | 680 | 5% | 1/10W |
| R269 | 1-216-049-91 | RES-CHIP | 1K | 5% | 1/10W |
| R270 | 1-216-081-00 | RES-CHIP | 22K | 5% | 1/10W |
| | | (ALL EXCEPT KV-32FS12) | | | |
| R271 | 1-216-081-00 | RES-CHIP | 22K | 5% | 1/10W |
| | | (ALL EXCEPT KV-32FS12) | | | |
| R272 | 1-216-081-00 | RES-CHIP | 22K | 5% | 1/10W |
| | | (ALL EXCEPT KV-32FS12) | | | |
| R273 | 1-216-073-00 | RES-CHIP | 10K | 5% | 1/10W |
| R274 | 1-216-295-91 | SHORT | | | |
| R275 | 1-216-081-00 | RES-CHIP | 22K | 5% | 1/10W |
| | | (KV-32FS12/32FS16 ONLY) | | | |
| R276 | 1-216-085-00 | RES-CHIP | 33K | 5% | 1/10W |
| R277 | 1-216-129-00 | RES-CHIP | 2.2M | 5% | 1/10W |
| | | (KV-27FV16/29FV16/29FV16C ONLY) | | | |
| R277 | 1-216-133-00 | RES-CHIP | 3.3M | 5% | 1/10W |
| | | (KV-32FS12/32FS16 ONLY) | | | |
| R278 | 1-216-295-91 | SHORT | | | |
| R279 | 1-247-807-31 | CARBON | 100 | 5% | 1/4W |
| R280 | 1-216-069-00 | RES-CHIP | 6.8K | 5% | 1/10W |
| R281 | 1-208-798-11 | METAL CHIP | 4.7K | 0.50% | 1/10W |
| R282 | 1-208-790-11 | METAL CHIP | 2.2K | 0.50% | 1/10W |
| R283 | 1-216-689-11 | RES-CHIP | 39K | 5% | 1/10W |
| R284 | 1-216-049-91 | RES-CHIP | 1K | 5% | 1/10W |
| | | (KV-27FV16/29FV16/29FV16C ONLY) | | | |
| R285 | 1-216-049-91 | RES-CHIP | 1K | 5% | 1/10W |
| | | (KV-27FV16/29FV16/29FV16C ONLY) | | | |

MA

**Note:**

**The components identified by shading and mark ⚠ are critical for safety. Replace only with part number specified.**

**Note:**

**Les composants identifies per un trame et une marque ⚠ sont critiques pour la securite. Ne les remplacer que par une piece portant le numero specifie.**

| REF.NO. | PART NO. | DESCRIPTION | REMARK | | |
|---|---|---|---|---|---|
| R286 | 1-216-089-91 | RES-CHIP | 47K | 5% | 1/10W |
| | | (KV-27FV16/29FV16/29FV16C ONLY) | | | |
| R287 | 1-216-097-91 | RES-CHIP | 100K | 5% | 1/10W |
| | | (KV-27FV16/29FV16/29FV16C ONLY) | | | |
| R288 | 1-216-041-00 | RES-CHIP | 470 | 5% | 1/10W |
| | | (KV-27FV16/29FV16/29FV16C ONLY) | | | |
| R289 | 1-216-049-91 | RES-CHIP | 1K | 5% | 1/10W |
| | | (KV-27FV16/29FV16/29FV16C ONLY) | | | |
| R290 | 1-216-043-91 | RES-CHIP | 560 | 5% | 1/10W |
| | | (KV-27FV16/29FV16/29FV16C ONLY) | | | |
| R291 | 1-216-053-00 | RES-CHIP | 1.5K | 5% | 1/10W |
| | | (KV-27FV16/29FV16/29FV16C ONLY) | | | |
| R298 | 1-216-065-91 | RES-CHIP | 4.7K | 5% | 1/10W |
| | | (KV-27FV16/29FV16/29FV16C ONLY) | | | |
| R299 | 1-216-033-00 | RES-CHIP | 220 | 5% | 1/10W |
| | | (KV-27FV16/29FV16/29FV16C ONLY) | | | |
| R300 | 1-216-295-91 | SHORT | | | |
| | | (KV-32FS12/32FS16 ONLY) | | | |
| R301 | 1-216-022-00 | RES-CHIP | 75 | 5% | 1/10W |
| R303 | 1-216-073-00 | RES-CHIP | 10K | 5% | 1/10W |
| R304 | 1-247-807-31 | CARBON | 100 | 5% | 1/4W |
| R305 | 1-216-295-91 | SHORT | | | |
| | | (KV-32FS12/32FS16 ONLY) | | | |
| R306 | 1-216-025-91 | RES-CHIP | 100 | 5% | 1/10W |
| R307 | 1-216-071-00 | RES-CHIP | 8.2K | 5% | 1/10W |
| | | (KV-27FV16/29FV16/29FV16C ONLY) | | | |
| R308 | 1-216-022-00 | RES-CHIP | 75 | 5% | 1/10W |
| R309 | 1-216-022-00 | RES-CHIP | 75 | 5% | 1/10W |
| R310 | 1-249-417-11 | CARBON | 1K | 5% | 1/4W |
| R311 | 1-216-025-91 | RES-CHIP | 100 | 5% | 1/10W |
| | | (KV-32FS12/32FS16 ONLY) | | | |
| R312 | 1-249-417-11 | CARBON | 1K | 5% | 1/4W |
| R313 | 1-216-049-91 | RES-CHIP | 1K | 5% | 1/10W |
| R314 | 1-216-081-00 | RES-CHIP | 22K | 5% | 1/10W |
| | | (ALL EXCEPT KV-32FS12) | | | |
| R315 | 1-216-022-00 | RES-CHIP | 75 | 5% | 1/10W |
| R316 | 1-216-067-00 | RES-CHIP | 5.6K | 5% | 1/10W |
| | | (KV-32FS12/32FS16 ONLY) | | | |
| R317 | 1-247-807-31 | CARBON | 100 | 5% | 1/4W |
| | | (KV-32FS12/32FS16 ONLY) | | | |
| R318 | 1-216-091-00 | RES-CHIP | 56K | 5% | 1/10W |
| | | (KV-32FS12/32FS16 ONLY) | | | |
| R319 | 1-216-081-00 | RES-CHIP | 22K | 5% | 1/10W |
| | | (KV-32FS12/32FS16 ONLY) | | | |
| R320 | 1-216-025-91 | RES-CHIP | 100 | 5% | 1/10W |
| | | (KV-32FS12/32FS16 ONLY) | | | |
| R321 | 1-216-043-91 | RES-CHIP | 560 | 5% | 1/10W |
| | | (KV-32FS12/32FS16 ONLY) | | | |
| R322 | 1-216-025-91 | RES-CHIP | 100 | 5% | 1/10W |
| R323 | 1-216-025-91 | RES-CHIP | 100 | 5% | 1/10W |
| R324 | 1-216-065-91 | RES-CHIP | 4.7K | 5% | 1/10W |
| R325 | 1-249-417-11 | CARBON | 1K | 5% | 1/4W |

| REF.NO. | PART NO. | DESCRIPTION | REMARK | | |
|---|---|---|---|---|---|
| R326 | 1-208-806-11 | METAL CHIP | 10K | 0.50% | 1/10W |
| R327 | 1-216-025-91 | RES-CHIP | 100 | 5% | 1/10W |
| R328 | 1-216-025-91 | RES-CHIP | 100 | 5% | 1/10W |
| | | (KV-32FS12/32FS16 ONLY) | | | |
| R329 | 1-216-025-91 | RES-CHIP | 100 | 5% | 1/10W |
| R331 | 1-216-049-91 | RES-CHIP | 1K | 5% | 1/10W |
| | | (KV-32FS12/32FS16 ONLY) | | | |
| R332 | 1-216-022-00 | RES-CHIP | 75 | 5% | 1/10W |
| R333 | 1-216-067-00 | RES-CHIP | 5.6K | 5% | 1/10W |
| | | (KV-32FS12/32FS16 ONLY) | | | |
| R334 | 1-216-025-91 | RES-CHIP | 100 | 5% | 1/10W |
| | | (KV-32FS12/32FS16 ONLY) | | | |
| R335 | 1-216-057-00 | RES-CHIP | 2.2K | 5% | 1/10W |
| R336 | 1-216-057-00 | RES-CHIP | 2.2K | 5% | 1/10W |
| R337 | 1-216-057-00 | RES-CHIP | 2.2K | 5% | 1/10W |
| R338 | 1-216-073-00 | RES-CHIP | 10K | 5% | 1/10W |
| R339 | 1-216-091-00 | RES-CHIP | 56K | 5% | 1/10W |
| | | (KV-32FS12/32FS16 ONLY) | | | |
| R340 | 1-216-025-91 | RES-CHIP | 100 | 5% | 1/10W |
| R341 | 1-216-089-91 | RES-CHIP | 47K | 5% | 1/10W |
| R342 | 1-216-049-91 | RES-CHIP | 1K | 5% | 1/10W |
| R343 | 1-216-097-91 | RES-CHIP | 100K | 5% | 1/10W |
| R344 | 1-216-295-91 | SHORT | | | |
| R345 | 1-216-097-91 | RES-CHIP | 100K | 5% | 1/10W |
| R346 | 1-216-097-91 | RES-CHIP | 100K | 5% | 1/10W |
| R347 | 1-216-025-91 | RES-CHIP | 100 | 5% | 1/10W |
| R348 | 1-216-022-00 | RES-CHIP | 75 | 5% | 1/10W |
| | | (KV-27FV16/29FV16/29FV16C ONLY) | | | |
| R349 | 1-216-025-91 | RES-CHIP | 100 | 5% | 1/10W |
| R350 | 1-216-022-00 | RES-CHIP | 75 | 5% | 1/10W |
| | | (KV-27FV16/29FV16/29FV16C ONLY) | | | |
| R351 | 1-216-041-00 | RES-CHIP | 470 | 5% | 1/10W |
| | | (KV-32FS12/32FS16 ONLY) | | | |
| R352 | 1-247-807-31 | CARBON | 100 | 5% | 1/4W |
| | | (KV-32FS12/32FS16 ONLY) | | | |
| R353 | 1-247-807-31 | CARBON | 100 | 5% | 1/4W |
| | | (KV-32FS12/32FS16 ONLY) | | | |
| R354 | 1-216-025-91 | RES-CHIP | 100 | 5% | 1/10W |
| | | (KV-32FS12/32FS16 ONLY) | | | |
| R355 | 1-216-053-00 | RES-CHIP | 1.5K | 5% | 1/10W |
| | | (KV-32FS12/32FS16 ONLY) | | | |
| R356 | 1-216-025-91 | RES-CHIP | 100 | 5% | 1/10W |
| R357 | 1-216-022-00 | RES-CHIP | 75 | 5% | 1/10W |
| R358 | 1-216-093-91 | RES-CHIP | 68K | 5% | 1/10W |
| R359 | 1-216-057-00 | RES-CHIP | 2.2K | 5% | 1/10W |
| | | (KV-32FS12/32FS16 ONLY) | | | |
| R360 | 1-216-093-91 | RES-CHIP | 68K | 5% | 1/10W |
| R361 | 1-216-022-00 | RES-CHIP | 75 | 5% | 1/10W |
| R362 | 1-216-035-00 | RES-CHIP | 270 | 5% | 1/10W |
| R363 | 1-216-039-00 | RES-CHIP | 390 | 5% | 1/10W |

MA P

**Note:**

**The components identified by shading and mark ⚠ are critical for safety. Replace only with part number specified.**

**Note:**

**Les composants identifies per un trame et une marque ⚠ sont critiques pour la securite. Ne les remplacer que par une piece portant le numero specifie.**

| REF.NO. | PART NO. | DESCRIPTION | REMARK | | |
|---|---|---|---|---|---|
| R364 | 1-216-025-91 | RES-CHIP (KV-32FS12/32FS16 ONLY) | 100 | 5% | 1/10W |
| R365 | 1-216-025-91 | RES-CHIP (KV-32FS12/32FS16 ONLY) | 100 | 5% | 1/10W |
| R366 | 1-216-053-00 | RES-CHIP (KV-32FS12/32FS16 ONLY) | 1.5K | 5% | 1/10W |
| R367 | 1-216-057-00 | RES-CHIP (KV-32FS12/32FS16 ONLY) | 2.2K | 5% | 1/10W |
| R368 | 1-216-043-91 | RES-CHIP (KV-32FS12/32FS16 ONLY) | 560 | 5% | 1/10W |
| R369 | 1-216-033-00 | RES-CHIP (KV-32FS12/32FS16 ONLY) | 220 | 5% | 1/10W |
| R370 | 1-249-429-11 | CARBON | 10K | 5% | 1/4W |
| R372 | 1-216-043-91 | RES-CHIP (KV-32FS12/32FS16 ONLY) | 560 | 5% | 1/10W |
| R373 | 1-216-025-91 | RES-CHIP (KV-32FS12/32FS16 ONLY) | 100 | 5% | 1/10W |
| R374 | 1-216-025-91 | RES-CHIP (KV-32FS12/32FS16 ONLY) | 100 | 5% | 1/10W |
| R375 | 1-216-053-00 | RES-CHIP (KV-32FS12/32FS16 ONLY) | 1.5K | 5% | 1/10W |
| R376 | 1-216-022-00 | RES-CHIP | 75 | 5% | 1/10W |
| R377 | 1-216-057-00 | RES-CHIP (KV-32FS12/32FS16 ONLY) | 2.2K | 5% | 1/10W |
| R378 | 1-216-295-91 | SHORT (KV-32FS12/32FS16 ONLY) | | | |
| R379 | 1-216-049-91 | RES-CHIP (KV-32FS12/32FS16 ONLY) | 1K | 5% | 1/10W |
| R380 | 1-216-295-91 | SHORT (KV-27FV16/29FV16/29FV16C ONLY) | | | |
| R381 | 1-216-069-00 | RES-CHIP (KV-27FV16/29FV16/29FV16C ONLY) | 6.8K | 5% | 1/10W |
| R382 | 1-216-295-91 | SHORT | | | |
| R383 | 1-216-295-91 | SHORT | | | |
| R384 | 1-216-295-91 | SHORT | | | |
| R387 | 1-216-025-91 | RES-CHIP | 100 | 5% | 1/10W |
| R386 | 1-216-047-91 | RES-CHIP (KV-32FS12/32FS16 ONLY) | 820 | 5% | 1/10W |
| R388 | 1-216-025-91 | RES-CHIP | 100 | 5% | 1/10W |
| R389 | 1-216-049-91 | RES-CHIP (KV-32FS12/32FS16 ONLY) | 1K | 5% | 1/10W |
| R392 | 1-216-067-00 | RES-CHIP (KV-32FS12/32FS16 ONLY) | 5.6K | 5% | 1/10W |
| R394 | 1-216-043-91 | RES-CHIP (KV-32FS12/32FS16 ONLY) | 560 | 5% | 1/10W |
| R395 | 1-216-043-91 | RES-CHIP (KV-32FS12/32FS16 ONLY) | 560 | 5% | 1/10W |
| R396 | 1-247-807-31 | CARBON (KV-32FS12/32FS16 ONLY) | 100 | 5% | 1/4W |
| R398 | 1-216-091-00 | RES-CHIP (KV-27FV16/29FV16/29FV16C ONLY) | 56K | 5% | 1/10W |
| R398 | 1-216-109-00 | RES-CHIP (KV-32FS12/32FS16 ONLY) | 330K | 5% | 1/10W |
| R399 | 1-216-109-00 | RES-CHIP (KV-27FV16/29FV16/29FV16C ONLY) | 330K | 5% | 1/10W |
| R399 | 1-216-689-11 | RES-CHIP (KV-32FS12/32FS16 ONLY) | 39K | 5% | 1/10W |
| R434 | 1-216-065-91 | RES-CHIP (ALL EXCEPT KV-32FS12) | 4.7K | 5% | 1/10W |
| R435 | 1-216-065-91 | RES-CHIP (ALL EXCEPT KV-32FS12) | 4.7K | 5% | 1/10W |

**TUNER**

| | | | |
|---|---|---|---|
| TU150 | ⚠ | 8-598-501-00 | TUNER, FSS BTF-FA402 (ALL EXCEPT KV-32FS12) |

**CRYSTAL**

| | | |
|---|---|---|
| X001 | 1-767-487-11 | VIBRATOR, CRYSTAL |
| X301 | 1-567-505-11 | OSCILLATOR, CRYSTAL |

P

| | | |
|---|---|---|
| * | A-1190-367-A | P MOUNTED PC BOARD (ALL EXCEPT KV-32FS12) |

**CAPACITOR**

| | | | | | |
|---|---|---|---|---|---|
| C3301 | 1-163-031-11 | CERAMIC CHIP | 0.01µF | | 50V |
| C3302 | 1-163-031-11 | CERAMIC CHIP | 0.01µF | | 50V |
| C3303 | 1-104-664-11 | ELECT | 47µF | 20% | 16V |
| C3304 | 1-163-031-11 | CERAMIC CHIP | 0.01µF | | 50V |
| C3305 | 1-163-031-11 | CERAMIC CHIP | 0.01µF | | 50V |
| C3306 | 1-163-038-91 | CERAMIC CHIP | 0.1µF | | 25V |
| C3308 | 1-164-005-11 | CERAMIC CHIP | 0.47µF | | 25V |
| C3309 | 1-163-034-00 | CERAMIC CHIP | 0.033µF | | 50V |
| C3310 | 1-164-222-11 | CERAMIC CHIP | 0.22µF | | 25V |
| C3311 | 1-163-233-11 | CERAMIC CHIP | 18PF | 5% | 50V |
| C3314 | 1-163-031-11 | CERAMIC CHIP | 0.01µF | | 50V |
| C3315 | 1-163-031-11 | CERAMIC CHIP | 0.01µF | | 50V |
| C3316 | 1-163-133-00 | CERAMIC CHIP | 470PF | 5% | 50V |
| C3317 | 1-163-133-00 | CERAMIC CHIP | 470PF | 5% | 50V |
| C3319 | 1-163-133-00 | CERAMIC CHIP | 470PF | 5% | 50V |
| C3320 | 1-164-005-11 | CERAMIC CHIP | 0.47µF | | 25V |
| C3321 | 1-163-009-11 | CERAMIC CHIP | 0.001µF | 10% | 50V |
| C3323 | 1-104-664-11 | ELECT | 47µF | 20% | 16V |
| C3324 | 1-163-031-11 | CERAMIC CHIP | 0.01µF | | 50V |
| C3325 | 1-163-031-11 | CERAMIC CHIP | 0.01µF | | 50V |
| C3326 | 1-104-664-11 | ELECT | 47µF | 20% | 16V |

P

**Note:**

**The components identified by shading and mark ⚠ are critical for safety. Replace only with part number specified.**

**Note:**

**Les composants identifies per un trame et une marque ⚠ sont critiques pour la securite. Ne les remplacer que par une piece portant le numero specifie.**

| REF.NO. | PART NO. | DESCRIPTION | REMARK | | |
|---|---|---|---|---|---|
| C3327 | 1-104-664-11 | ELECT | 47µF | 20% | 16V |
| C3328 | 1-104-664-11 | ELECT | 47µF | 20% | 16V |
| C3330 | 1-126-964-11 | ELECT | 10µF | 20% | 50V |
| C3331 | 1-163-009-11 | CERAMIC CHIP | 0.001µF | 10% | 50V |
| C3332 | 1-164-346-11 | CERAMIC CHIP | 1µF | | 16V |
| C3333 | 1-164-346-11 | CERAMIC CHIP | 1µF | | 16V |
| C3334 | 1-164-005-11 | CERAMIC CHIP | 0.47µF | | 25V |
| C3335 | 1-164-182-11 | CERAMIC CHIP | 0.0033µF | 10% | 50V |
| C3336 | 1-163-031-11 | CERAMIC CHIP | 0.01µF | | 50V |
| C3339 | 1-163-005-11 | CERAMIC CHIP | 470PF | 10% | 50V |
| C3340 | 1-126-967-11 | ELECT | 47µF | 20% | 50V |
| C3341 | 1-164-222-11 | CERAMIC CHIP | 0.22µF | | 25V |
| C3342 | 1-163-037-11 | CERAMIC CHIP | 0.022µF | 10% | 50V |
| C3343 | 1-126-967-11 | ELECT | 47µF | 20% | 50V |
| C3344 | 1-164-222-11 | CERAMIC CHIP | 0.22µF | | 25V |
| C3345 | 1-164-346-11 | CERAMIC CHIP | 1µF | | 16V |
| C3346 | 1-164-346-11 | CERAMIC CHIP | 1µF | | 16V |
| C3347 | 1-164-346-11 | CERAMIC CHIP | 1µF | | 16V |
| C3349 | 1-164-005-11 | CERAMIC CHIP | 0.47µF | | 25V |
| C3350 | 1-163-233-11 | CERAMIC CHIP | 18PF | 5% | 50V |
| C3351 | 1-163-113-00 | CERAMIC CHIP | 68PF | 5% | 50V |
| C3352 | 1-164-222-11 | CERAMIC CHIP | 0.22µF | | 25V |
| C3353 | 1-126-967-11 | ELECT | 47µF | 20% | 50V |
| C3354 | 1-163-037-11 | CERAMIC CHIP | 0.022µF | 10% | 50V |
| C3355 | 1-164-346-11 | CERAMIC CHIP | 1µF | | 16V |
| C3356 | 1-164-346-11 | CERAMIC CHIP | 1µF | | 16V |
| C3357 | 1-164-346-11 | CERAMIC CHIP | 1µF | | 16V |

**CONNECTOR**

| | | | |
|---|---|---|---|
| CN3300 | 1-573-301-21 | CONNECTOR, BOARD TO BOARD 20P | |

**DIODE**

| | | | |
|---|---|---|---|
| D3301 | 8-719-073-01 | DIODE MA111-TX | |
| D3304 | 8-719-422-12 | DIODE UDZ-TE-17-3.9B | |

**IC**

| | | | |
|---|---|---|---|
| IC3300 | 8-759-353-00 | IC NJM2534M(TE2) | |
| IC3301 | 8-759-660-74 | IC M65664FP-DS60S | |
| IC3302 | 8-759-458-18 | IC TDA8501T | |

**COIL**

| | | | |
|---|---|---|---|
| L3300 | 1-414-267-11 | INDUCTOR | 10µH |
| L3301 | 1-410-682-31 | INDUCTOR | 470µH |
| L3302 | 1-414-267-11 | INDUCTOR | 10µH |
| L3303 | 1-414-267-11 | INDUCTOR | 10µH |
| L3304 | 1-414-267-11 | INDUCTOR | 10µH |

**TRANSISTOR**

| REF.NO. | PART NO. | DESCRIPTION |
|---|---|---|
| Q3300 | 8-729-422-27 | TRANSISTOR 2SD601A-QRS-TX |
| Q3301 | 8-729-422-27 | TRANSISTOR 2SD601A-QRS-TX |
| Q3302 | 8-729-422-27 | TRANSISTOR 2SD601A-QRS-TX |
| Q3304 | 8-729-216-22 | TRANSISTOR 2SB709A-QRS-TX |
| Q3305 | 8-729-216-22 | TRANSISTOR 2SB709A-QRS-TX |
| Q3306 | 8-729-216-22 | TRANSISTOR 2SB709A-QRS-TX |
| Q3308 | 8-729-216-22 | TRANSISTOR 2SB709A-QRS-TX |
| Q3309 | 8-729-422-27 | TRANSISTOR 2SD601A-QRS-TX |
| Q3311 | 8-729-111-55 | TRANSISTOR 2SD1292 |
| Q3312 | 8-729-216-22 | TRANSISTOR 2SB709A-QRS-TX |
| Q3313 | 8-729-422-27 | TRANSISTOR 2SD601A-QRS-TX |
| Q3314 | 8-729-422-27 | TRANSISTOR 2SD601A-QRS-TX |
| Q3315 | 8-729-216-22 | TRANSISTOR 2SB709A-QRS-TX |
| Q3316 | 8-729-216-22 | TRANSISTOR 2SB709A-QRS-TX |
| Q3317 | 8-729-422-27 | TRANSISTOR 2SD601A-QRS-TX |
| Q3318 | 8-729-422-27 | TRANSISTOR 2SD601A-QRS-TX |
| Q3319 | 8-729-422-27 | TRANSISTOR 2SD601A-QRS-TX |
| Q3320 | 8-729-422-27 | TRANSISTOR 2SD601A-QRS-TX |
| Q3321 | 8-729-216-22 | TRANSISTOR 2SB709A-QRS-TX |
| Q3323 | 8-729-422-27 | TRANSISTOR 2SD601A-QRS-TX |

**RESISTOR**

| REF.NO. | PART NO. | DESCRIPTION | REMARK | | |
|---|---|---|---|---|---|
| R3300 | 1-216-041-00 | RES-CHIP | 470 | 5% | 1/10W |
| R3303 | 1-216-073-00 | RES-CHIP | 10K | 5% | 1/10W |
| R3304 | 1-216-133-00 | RES-CHIP | 3.3M | 5% | 1/10W |
| R3305 | 1-216-037-00 | RES-CHIP | 330 | 5% | 1/10W |
| R3308 | 1-216-085-00 | RES-CHIP | 33K | 5% | 1/10W |
| R3309 | 1-216-025-91 | RES-CHIP | 100 | 5% | 1/10W |
| R3310 | 1-216-025-91 | RES-CHIP | 100 | 5% | 1/10W |
| R3311 | 1-216-037-00 | RES-CHIP | 330 | 5% | 1/10W |
| R3312 | 1-216-043-91 | RES-CHIP | 560 | 5% | 1/10W |
| R3313 | 1-216-035-00 | RES-CHIP | 270 | 5% | 1/10W |
| R3316 | 1-216-295-91 | SHORT | | | |
| R3317 | 1-216-295-91 | SHORT | | | |
| R3318 | 1-216-061-00 | RES-CHIP | 3.3K | 5% | 1/10W |
| R3319 | 1-216-295-91 | SHORT | | | |
| R3320 | 1-216-073-00 | RES-CHIP | 10K | 5% | 1/10W |
| R3321 | 1-216-049-91 | RES-CHIP | 1K | 5% | 1/10W |
| R3322 | 1-216-091-00 | RES-CHIP | 56K | 5% | 1/10W |
| R3323 | 1-216-049-91 | RES-CHIP | 1K | 5% | 1/10W |
| R3324 | 1-216-033-00 | RES-CHIP | 220 | 5% | 1/10W |
| R3325 | 1-216-057-00 | RES-CHIP | 2.2K | 5% | 1/10W |
| R3328 | 1-216-295-91 | SHORT | | | |
| R3329 | 1-216-033-00 | RES-CHIP | 220 | 5% | 1/10W |
| R3333 | 1-216-049-91 | RES-CHIP | 1K | 5% | 1/10W |
| R3334 | 1-216-049-91 | RES-CHIP | 1K | 5% | 1/10W |
| R3335 | 1-216-049-91 | RES-CHIP | 1K | 5% | 1/10W |

P VA

**Note:**

**The components identified by shading and mark ⚠ are critical for safety. Replace only with part number specified.**

**Note:**

**Les composants identifies per un trame et une marque ⚠ sont critiques pour la securite. Ne les remplacer que par une piece portant le numero specifie.**

| REF.NO. | PART NO. | DESCRIPTION | REMARK | | |
|---|---|---|---|---|---|
| R3336 | 1-216-295-91 | SHORT | | | |
| R3338 | 1-216-295-91 | SHORT | | | |
| R3340 | 1-216-295-91 | SHORT | | | |
| R3341 | 1-216-057-00 | RES-CHIP | 2.2K | 5% | 1/10W |
| R3342 | 1-216-295-91 | SHORT | | | |
| R3343 | 1-216-065-91 | RES-CHIP | 4.7K | 5% | 1/10W |
| R3344 | 1-216-073-00 | RES-CHIP | 10K | 5% | 1/10W |
| R3345 | 1-216-073-00 | RES-CHIP | 10K | 5% | 1/10W |
| R3346 | 1-216-045-00 | RES-CHIP | 680 | 5% | 1/10W |
| R3347 | 1-216-049-91 | RES-CHIP | 1K | 5% | 1/10W |
| R3349 | 1-215-857-11 | METAL OXIDE | 10 | 5% | 1W |
| R3350 | 1-216-049-91 | RES-CHIP | 1K | 5% | 1/10W |
| R3351 | 1-216-041-00 | RES-CHIP | 470 | 5% | 1/10W |
| R3355 | 1-216-049-91 | RES-CHIP | 1K | 5% | 1/10W |
| R3356 | 1-216-113-00 | RES-CHIP | 470K | 5% | 1/10W |
| R3357 | 1-216-041-00 | RES-CHIP | 470 | 5% | 1/10W |
| R3358 | 1-216-689-11 | RES-CHIP | 39K | 5% | 1/10W |
| R3359 | 1-216-113-00 | RES-CHIP | 470K | 5% | 1/10W |
| R3360 | 1-216-051-00 | RES-CHIP | 1.2K | 5% | 1/10W |
| R3361 | 1-216-045-00 | RES-CHIP | 680 | 5% | 1/10W |
| R3365 | 1-216-073-00 | RES-CHIP | 10K | 5% | 1/10W |
| R3366 | 1-216-049-91 | RES-CHIP | 1K | 5% | 1/10W |
| R3367 | 1-216-073-00 | RES-CHIP | 10K | 5% | 1/10W |
| R3368 | 1-216-049-91 | RES-CHIP | 1K | 5% | 1/10W |
| R3369 | 1-216-049-91 | RES-CHIP | 1K | 5% | 1/10W |
| R3370 | 1-216-049-91 | RES-CHIP | 1K | 5% | 1/10W |
| R3371 | 1-216-049-91 | RES-CHIP | 1K | 5% | 1/10W |
| R3372 | 1-216-049-91 | RES-CHIP | 1K | 5% | 1/10W |
| R3373 | 1-216-049-91 | RES-CHIP | 1K | 5% | 1/10W |
| R3374 | 1-216-025-91 | RES-CHIP | 100 | 5% | 1/10W |
| R3375 | 1-216-025-91 | RES-CHIP | 100 | 5% | 1/10W |
| R3376 | 1-216-025-91 | RES-CHIP | 100 | 5% | 1/10W |
| R3377 | 1-216-041-00 | RES-CHIP | 470 | 5% | 1/10W |
| R3378 | 1-216-049-91 | RES-CHIP | 1K | 5% | 1/10W |
| R3379 | 1-216-049-91 | RES-CHIP | 1K | 5% | 1/10W |
| R3380 | 1-216-043-91 | RES-CHIP | 560 | 5% | 1/10W |
| R3381 | 1-216-041-00 | RES-CHIP | 470 | 5% | 1/10W |
| R3382 | 1-216-043-91 | RES-CHIP | 560 | 5% | 1/10W |
| R3383 | 1-216-041-00 | RES-CHIP | 470 | 5% | 1/10W |
| R3384 | 1-216-045-00 | RES-CHIP | 680 | 5% | 1/10W |
| R3385 | 1-216-043-91 | RES-CHIP | 560 | 5% | 1/10W |
| R3386 | 1-216-041-00 | RES-CHIP | 470 | 5% | 1/10W |
| R3387 | 1-216-049-91 | RES-CHIP | 1K | 5% | 1/10W |
| R3388 | 1-216-049-91 | RES-CHIP | 1K | 5% | 1/10W |
| R3392 | 1-208-834-11 | METAL CHIP | 150K | 0.50% | 1/10W |
| R3393 | 1-216-295-91 | SHORT | | | |
| R3395 | 1-216-689-11 | RES-CHIP | 39K | 5% | 1/10W |
| R3396 | 1-216-081-00 | RES-CHIP | 22K | 5% | 1/10W |
| R3397 | 1-216-025-91 | RES-CHIP | 100 | 5% | 1/10W |
| R3398 | 1-216-047-91 | RES-CHIP | 820 | 5% | 1/10W |
| R3399 | 1-216-045-00 | RES-CHIP | 680 | 5% | 1/10W |
| R3400 | 1-216-089-91 | RES-CHIP | 47K | 5% | 1/10W |
| R3401 | 1-216-089-91 | RES-CHIP | 47K | 5% | 1/10W |
| R3402 | 1-216-081-00 | RES-CHIP | 22K | 5% | 1/10W |
| R3403 | 1-216-089-91 | RES-CHIP | 47K | 5% | 1/10W |
| R3404 | 1-216-081-00 | RES-CHIP | 22K | 5% | 1/10W |
| R3405 | 1-216-089-91 | RES-CHIP | 47K | 5% | 1/10W |

**CRYSTAL**

| | | |
|---|---|---|
| X3300 | 1-567-505-11 | OSCILLATOR, CRYSTAL |
| X3301 | 1-781-377-11 | VIBRATOR, CRYSTAL |

## VA

| | | |
|---|---|---|
| * | A-1342-550-A | VA (VAR) MOUNTED PC BOARD (KV-27FV16/29FV16/29FV16C ONLY) |
| * | A-1342-549-A | VA (VAR) MOUNTED PC BOARD (KV-32FS12/32FS16 ONLY) |
| | 4-382-854-11 | SCREW (M3X10), P, SW (+) |

**CAPACITOR**

| | | | | | |
|---|---|---|---|---|---|
| C805 | 1-129-763-00 | FILM (KV-27FV16/29FV16/29FV16C ONLY) | 0.033µF | 5% | 200V |
| C805 | 1-136-601-11 | FILM (KV-32FS12/32FS16 ONLY) | 0.01UF | 5% | 630V |
| C811 | 1-129-765-00 | FILM (KV-27FV16/29FV16/29FV16C ONLY) | 0.047µF | 5% | 200V |
| C811 | 1-129-768-51 | FILM (KV-32FS12/32FS16 ONLY) | 0.082µF | 5% | 200V |
| C901 | 1-107-667-11 | ELECT | 2.2µF | 20% | 160V |
| C902 | 1-130-491-00 | MYLAR | 0.047µF | 5% | 50V |
| C903 | 1-126-925-11 | ELECT | 470µF | 20% | 10V |
| C904 | 1-130-471-00 | MYLAR | 0.001µF | 5% | 50V |
| C905 | 1-106-383-00 | MYLAR | 0.047µF | 10% | 200V |
| C906 | 1-130-471-00 | MYLAR | 0.001µF | 5% | 50V |
| C907 | 1-107-638-11 | ELECT | 33µF | 20% | 160V |
| C908 | 1-126-925-11 | ELECT | 470µF | 20% | 10V |
| C909 | 1-161-830-00 | CERAMIC | 0.0047µF | | 500V |
| C910 | 1-104-999-11 | MYLAR | 0.1µF | 10% | 200V |
| C911 | 1-104-665-11 | ELECT | 100µF | 20% | 10V |
| C912 | 1-126-941-11 | ELECT | 470µF | 20% | 25V |
| C913 | 1-102-074-00 | CERAMIC | 0.001µF | 10% | 50V |
| C914 | 1-130-491-00 | MYLAR | 0.047µF | 5% | 50V |

VA

**Note:**

**The components identified by shading and mark ⚠ are critical for safety. Replace only with part number specified.**

**Note:**

**Les composants identifies per un trame et une marque ⚠ sont critiques pour la securite. Ne les remplacer que par une piece portant le numero specifie.**

| REF.NO. | PART NO. | DESCRIPTION | REMARK | | |
|---|---|---|---|---|---|
| | **CONNECTOR** | | | | |
| CN901 * | 1-564-508-11 | PLUG, CONNECTOR 5P | | | |
| CN902 * | 1-770-723-11 | CONNECTOR, BOARD TO BOARD 8P | | | |
| CN904 * | 1-564-507-11 | PLUG, CONNECTOR 4P | | | |
| | **DIODE** | | | | |
| D804 | 8-719-302-43 | DIODE RGP10GPKG23 | | | |
| D805 | 8-719-991-33 | DIODE 1SS133T-77 | | | |
| D806 | 8-719-991-33 | DIODE 1SS133T-77 | | | |
| D807 | 8-719-210-21 | DIODE ERA82-004TP5 | | | |
| D901 | 8-719-110-88 | DIODE MTZJ-T-77-39 | | | |
| D902 | 8-719-110-88 | DIODE MTZJ-T-77-39 | | | |
| D903 | 8-719-991-33 | DIODE 1SS133T-77 | | | |
| | **COIL** | | | | |
| L801 | 1-406-989-21 | INDUCTOR | 10mH | | |
| L802 | 1-459-111-00 | INDUCTOR | 10mH | | |
| L901 | 1-412-528-11 | INDUCTOR | 18µH | | |
| | **TRANSISTOR** | | | | |
| Q807 | 8-729-931-45 | TRANSISTOR IRF614 | | | |
| Q808 | 8-729-140-97 | TRANSISTOR 2SB734-T-34 | | | |
| Q901 | 8-729-017-06 | TRANSISTOR 2SC4793 | | | |
| Q902 | 8-729-017-05 | TRANSISTOR 2SA1837 | | | |
| Q903 | 8-729-423-33 | TRANSISTOR 2SC3311A-QRSTA | | | |
| Q904 | 8-729-423-33 | TRANSISTOR 2SC3311A-QRSTA | | | |
| Q905 | 8-729-119-76 | TRANSISTOR 2SA1309A-QRSTA | | | |
| Q906 | 8-729-423-33 | TRANSISTOR 2SC3311A-QRSTA | | | |
| | **RESISTOR** | | | | |
| R818 | 1-216-025-91 | RES-CHIP | 100 | 5% | 1/10W |
| R826 | 1-249-421-11 | CARBON | 2.2K | 5% | 1/4W |
| R876 | 1-216-049-91 | RES-CHIP | 1K | 5% | 1/10W |
| R901 | 1-249-401-11 | CARBON | 47 | 5% | 1/4W |
| R902 | 1-249-386-11 | CARBON | 2.7 | 5% | 1/4W |
| R903 | 1-249-414-11 | CARBON | 560 | 5% | 1/4W |
| R904 | 1-249-432-11 | CARBON | 18K | 5% | 1/4W |
| R905 | 1-249-417-11 | CARBON | 1K | 5% | 1/4W |
| R906 | 1-249-432-11 | CARBON | 18K | 5% | 1/4W |
| R907 | 1-249-386-11 | CARBON | 2.7 | 5% | 1/4W |
| R908 | 1-249-414-11 | CARBON | 560 | 5% | 1/4W |
| R909 | 1-260-312-11 | CARBON | 47 | 5% | 1/2W |
| R910 | 1-216-476-11 | METAL OXIDE | 180 | 5% | 3W |
| R911 | 1-249-403-11 | CARBON | 68 | 5% | 1/4W |
| R912 | 1-247-815-91 | CARBON | 220 | 5% | 1/4W |
| R913 | 1-249-403-11 | CARBON | 68 | 5% | 1/4W |
| R914 | 1-249-410-11 | CARBON | 270 | 5% | 1/4W |
| R915 | 1-249-417-11 | CARBON | 1K | 5% | 1/4W |
| R916 | 1-249-417-11 | CARBON | 1K | 5% | 1/4W |
| R917 | 1-249-417-11 | CARBON | 1K | 5% | 1/4W |
| R918 | 1-247-807-31 | CARBON | 100 | 5% | 1/4W |
| R919 | 1-247-807-31 | CARBON | 100 | 5% | 1/4W |
| R920 | 1-249-416-11 | CARBON | 820 | 5% | 1/4W |
| R921 | 1-249-429-11 | CARBON | 10K | 5% | 1/4W |
| R922 | 1-249-397-11 | CARBON | 22 | 5% | 1/4W |
| R923 | 1-249-401-11 | CARBON | 47 | 5% | 1/4W |

## ACCESSORIES AND PACKAGING

| | | |
|---|---|---|
| * | 4-041-259-01 | BAG, PROTECTION (KV-32FS12/32FS16 ONLY) |
| * | 4-041-255-01 | BAG, PROTECTION (KV-27FV16/29FV16/29FV16C ONLY) |
| * | 4-073-714-01 | CARTON, INDIVIDUAL (KV-32FS12/32FS16 ONLY) |
| * | 4-075-524-01 | CARTON, INDIVIDUAL (KV-29FV16/29FV16C ONLY) |
| * | 4-075-517-01 | CARTON, INDIVIDUAL (KV-27FV16 ONLY) |
| * | 4-075-515-01 | CUSHION ASSY, UPPER (KV-27FV16/29FV16/29FV16C ONLY) |
| * | 4-075-516-01 | CUSHION ASSY, LOWER (KV-27FV16/29FV16/29FV16C ONLY) |
| * | 4-073-715-01 | CUSHION ASSY, UPPER (KV-32FS12/32FS16 ONLY) |
| * | 4-073-716-01 | CUSHION ASSY, LOWER (KV-32FS12/32FS16 ONLY) |
| | 4-075-499-41 | MANUAL, INSTRUCTION (KV-29FV16/29FV16C ONLY) |
| | 4-075-499-21 | MANUAL, INSTRUCTION (KV-27FV16/32FS12/32FS16 ONLY) |

## REMOTE COMMANDER

| | |
|---|---|
| 1-418-496-11 | REMOTE COMMANDER (RM-Y171) (KV-27FV16/29FV16/29FV16C ONLY) |
| 1-418-387-11 | REMOTE COMMANDER (RM-Y168) (KV-32FS12 ONLY) |
| 1-418-384-11 | REMOTE COMMANDER (RM-Y169) (KV-32FS16 ONLY) |
| 4-978-977-01 | BATTERY COVER (FOR RM-Y168/RM-Y169/RM-Y171) |

9-965-885-03

**Sony Corporation**
Sony Technology Center
Product Quality Division
Service Promotion Dept.

English
2000ES74337-1
Printed in USA
2000.5

**HISTORY INFORMATION FOR THE FOLLOWING MANUAL:**

# SERVICE MANUAL BA-5 CHASSIS

| MODEL NAME | REMOTE COMMANDER | DESTINATION | CHASSIS NO. |
|---|---|---|---|
| **KV-27FV16** | RM-Y171 | US | SCC-S40K-A |
| **KV-27FV16** | RM-Y171 | CND | SCC-S41J-A |
| **KV-29FV16** | RM-Y171 | E | SCC-S38Q-A |
| **KV-29FV16C** | RM-Y171 | E | SCC-S38R-A |
| **KV-32FS12** | RM-Y168 | US | SCC-S40F-A |
| **KV-32FS12** | RM-Y168 | CND | SCC-S41F-A |
| **KV-32FS16** | RM-Y169 | US | SCC-S40G-A |
| **KV-32FS16** | RM-Y169 | CND | SCC-S41G-A |

## *ORIGINAL MANUAL ISSUE DATE: 5/2000*

**ALL REVISIONS AND UPDATES TO THE ORIGINAL MANUAL ARE APPENDED TO THE END OF THE PDF FILE.**

| REVISION DATE | REVISION TYPE | SUBJECT |
|---|---|---|
| 5/2000 | No revisions or updates are applicable at this time. | |
| 6/2000 | CORRECTION-1 | New Block Diagram |
| 10/2002 | CORRECTION-2 | New 2 Pin THP601 |

**TRINITRON® COLOR TELEVISION**

**SONY®**

9-965-885-03

# SERVICE MANUAL

# BA-5 CHASSIS

Self Diagnosis Supported model

| MODEL | COMMANDER | DEST | CHASSIS NO. |
|---|---|---|---|
| **KV-27FV16** | RM-Y171 | US | SCC-S40K-A |
| **KV-27FV16** | RM-Y171 | CND | SCC-S41J-A |
| **KV-29FV16** | RM-Y171 | E | SCC-S38Q-A |
| **KV-29FV16C** | RM-Y171 | E | SCC-S38R-A |
| **KV-32FS12** | RM-Y168 | US | SCC-S40F-A |
| **KV-32FS12** | RM-Y168 | CND | SCC-S41F-A |
| **KV-32FS16** | RM-Y169 | US | SCC-S40G-A |
| **KV-32FS16** | RM-Y169 | CND | SCC-S41G-A |

## CORRECTION-1

**Subject: New Block Diagrams**

**Correct the service manual as shown below.**
**File this correction with the service manual.**

**Section 6: Block Diagrams (Page 31-34)**
**Size of Block Diagrams increased and replaced.**

**TRINITRON® COLOR TV**

**SONY®**

# SECTION 6
# DIAGRAMS

## 6.1 BLOCK DIAGRAM (1/2)

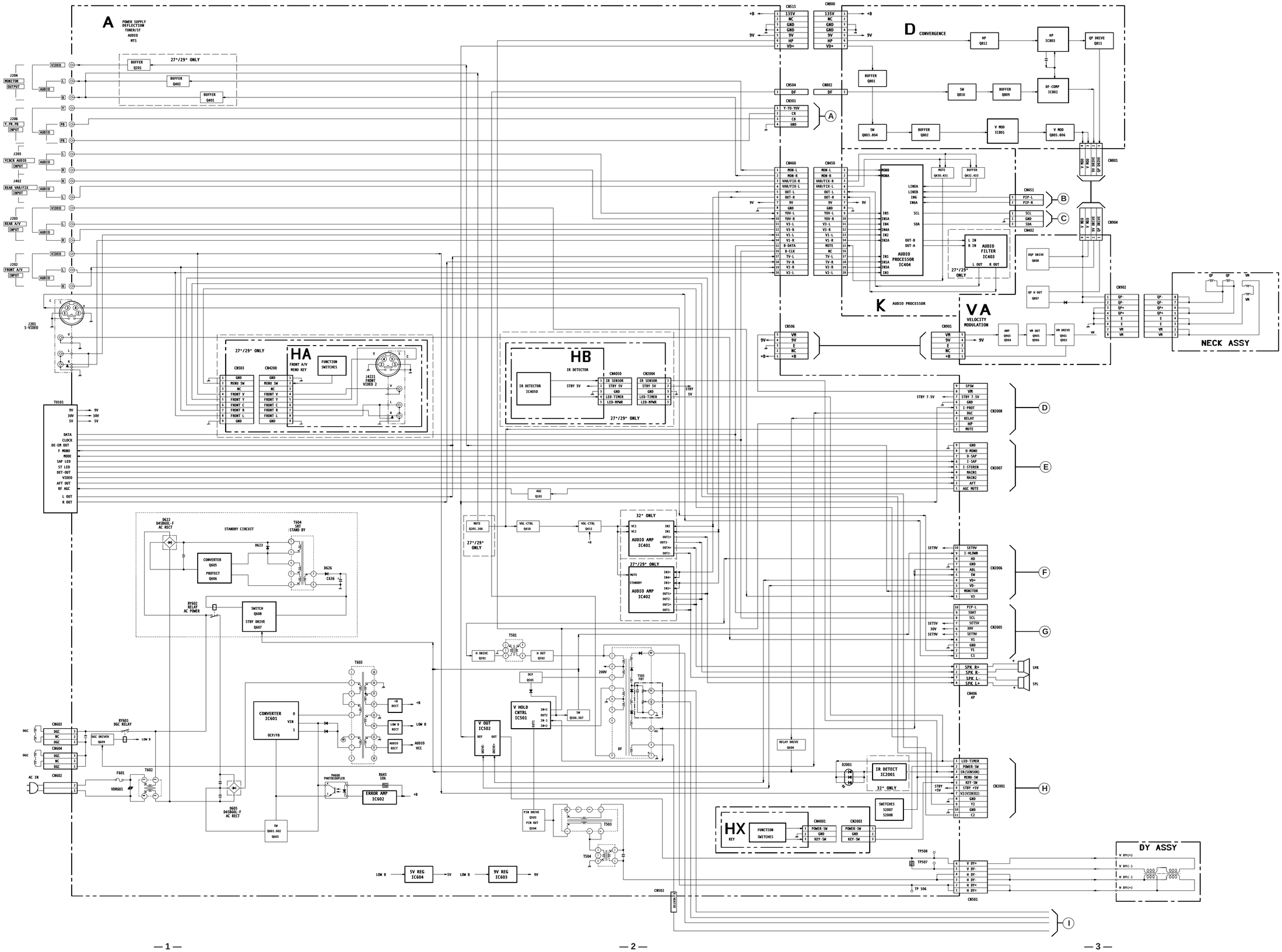

## 6.1 BLOCK DIAGRAM (2/2)

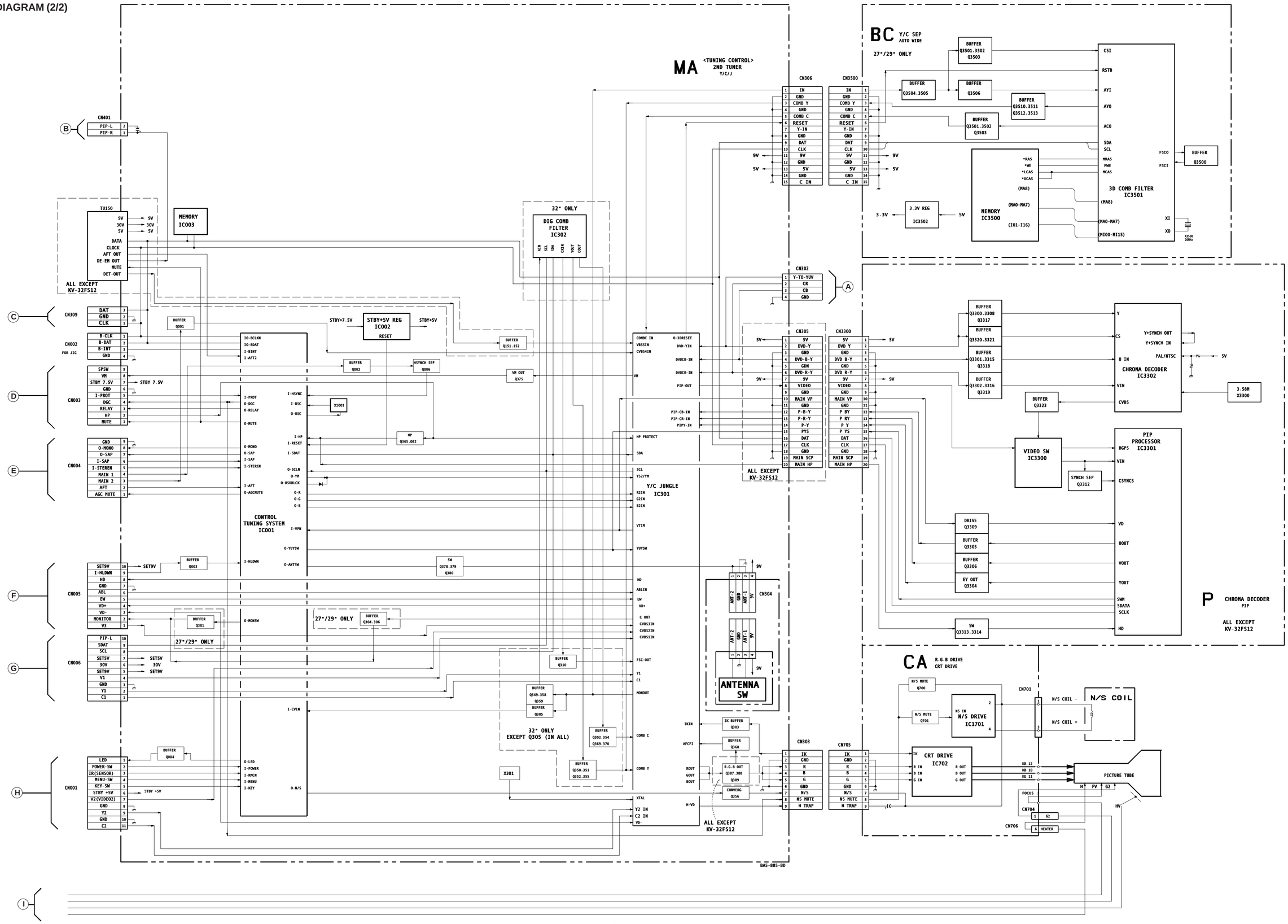

9-965-885-91

**Sony Corporation**
Sony Technology Center
Product Quality Division
Service Promotion Department

English
2000FJ74337-1
Printed in U.S.A.
©2000.6

Self Diagnosis Supported model

# SERVICE MANUAL BA-5 CHASSIS

| MODEL NAME | REMOTE COMMANDER | DESTINATION | CHASSIS NO. |
|---|---|---|---|
| KV-27FV16 | RM-Y171 | US | SCC-S40K-A |
| KV-27FV16 | RM-Y171 | CND | SCC-S41J-A |
| KV-29FV16 | RM-Y171 | E | SCC-S38Q-A |
| KV-29FV16C | RM-Y171 | E | SCC-S38R-A |
| KV-32FS12 | RM-Y168 | US | SCC-S40F-A |
| KV-32FS12 | RM-Y168 | CND | SCC-S41F-A |
| KV-32FS16 | RM-Y169 | US | SCC-S40G-A |
| KV-32FS16 | RM-Y169 | CND | SCC-S41G-A |

## CORRECTION - 2

SUBJECT: NEW 2 PIN THP601

Correct the service manual as shown.
File this Correction with the service manual.

SECTION 6: DIAGRAMS
6-3. A Board Schematic Diagram (Page 39)

SECTION 8: ELECTRICAL PARTS LIST (Page 73)

TRINITRON® COLOR TELEVISION

SONY®

9-965-885-92

☛ : Corrected Item

## SECTION 6: DIAGRAMS

### 6-3.A Board Schematic Diagram (Page 39)

If a set requires a 3 pin (THP601) thermistor it may still be ordered using the existing part number. If a set requires a 2 pin (THP601) thermistor the new part number must be used.

For 3 Pin Configuration

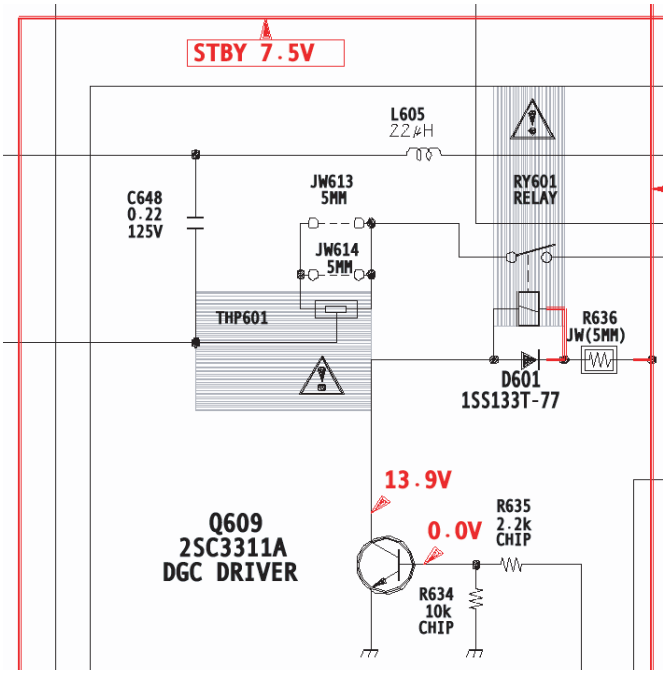


For 2 Pin Configuration

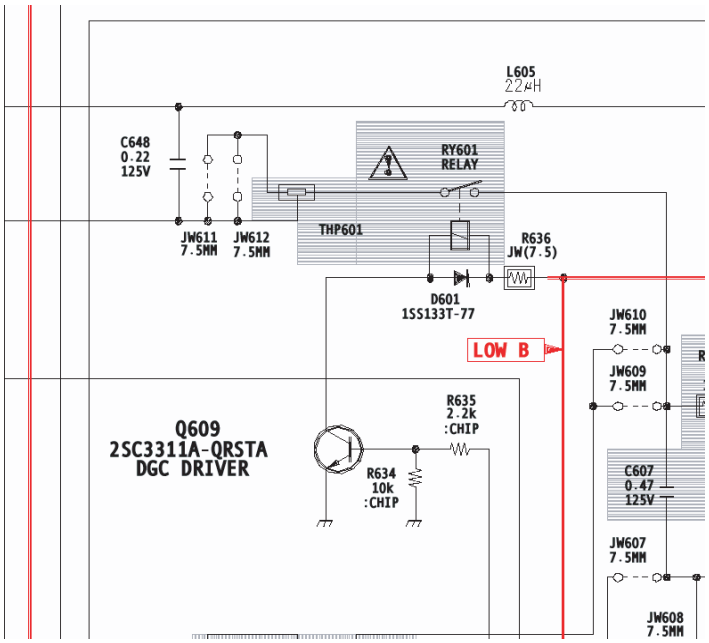


## SECTION 8: ELECTRICAL PARTS LIST (Page 73)

OLD

| REF. NO. | PART NO. | DESCRIPTION |
|---|---|---|
| ⚠ THP601 | 1-803-540-11 | THERMISTOR |

NEW

| REF. NO. | PART NO. | DESCRIPTION |
|---|---|---|
| ⚠ THP601 | 1-803-540-11 | THERMISTOR (3 PIN) |
| ⚠ THP601 | 1-804-313-11 | THERMISTOR (2 PIN) |

9-965-885-92

**Sony Corporation**
Sony Technology Center
Technical Services
Services Promotion Dept.

English
2002JJ74WEB-1
Printed in USA
2002.10